LOT 52
IN OR 1714/414
PARKWAY NORTH PB 5/263

**WILSON ELIZABETH F & KENNETH E**
1583 CANOPY DRIVE
FERNANDINA BEACH, FL 32034

**2026**

**00-00-31-163N-0052-0000**

## NASSAU COUNTY PROPERTY



## BUILDING CHARACTERISTICS

| ELEMENT | CD | CONSTRUCTION |
|---|---|---|
| Exterior Wall | 16 | WD FR STUC 100 |
| Roof Structur | 03 | GABLE/HIP 100 |
| Roof Cover | 03 | COMP SHNGL 100 |
| Interior Wall | 05 | DRYWALL 100 |
| Interior Floo | 14 | CARPET 80 |
| Interior Floo | 11 | CLAY TILE 20 |
| Air Condition | 03 | CENTRAL 100 |
| Heating Type | 04 | AIR DUCTED 100 |
| Bedrooms | | 3 100 |
| Bathrooms | | 2 100 |
| Frame | 02 | WOOD FRAME 100 |
| Stories | 2. | 2. 100 |
| Units | | 0 100 |
| Occupancy | 00 | NONE 100 |
| Quality | 05 | Quality Level 05 |
| DOR CODE | 0100 | SINGLE FAMILY |
| MAP NUM | | MKT AREA 01 |
| NEIGHBORHOOD/LOC | 1072.00 | |

| AREA TYPE | TOTAL GROSS AREA | PCT OF BASE | YEAR | TOT ADJ AREA | SUBAREA MARKET VALUE |
|---|---|---|---|---|---|
| BAS | 2,138 | 100 | 1998 | 2,138 | 373,866 |
| FGR | 489 | 55 | 1998 | 269 | 47,039 |
| FOP | 214 | 30 | 1998 | 64 | 11,192 |
| FST | 15 | 55 | 1998 | 8 | 1,399 |
| FUS | 355 | 100 | 1998 | 355 | 62,078 |
| PTO | 84 | 5 | 2000 | 4 | 700 |
| SFB | 45 | 80 | 1998 | 36 | 6,295 |
| SFB | 426 | 80 | 2000 | 341 | 59,630 |
| UOP | 90 | 20 | 1998 | 18 | 3,148 |
| TOTALS | 3,856 | | | 3,233 | 565,346 |

## MARKET ADJUSTMENTS

| TYPE | MDL | EFF. AREA | TOT ADJ PTS | EFF. BASE RATE | REPL. COST NEW | AYB | EYB | ECON | FNCT | | NORM | % COND |
|---|---|---|---|---|---|---|---|---|---|---|---|---|
| 0500 | 01 | 3,233 | 118.3600 | 196.48 | 635,220 | 1998 | 2003 | 0 | 0 | 0 | 11.00 | 89.00 |

1 SFR CUST 100% - 2011 Heated Area: 2870 HX Base Yr 2011

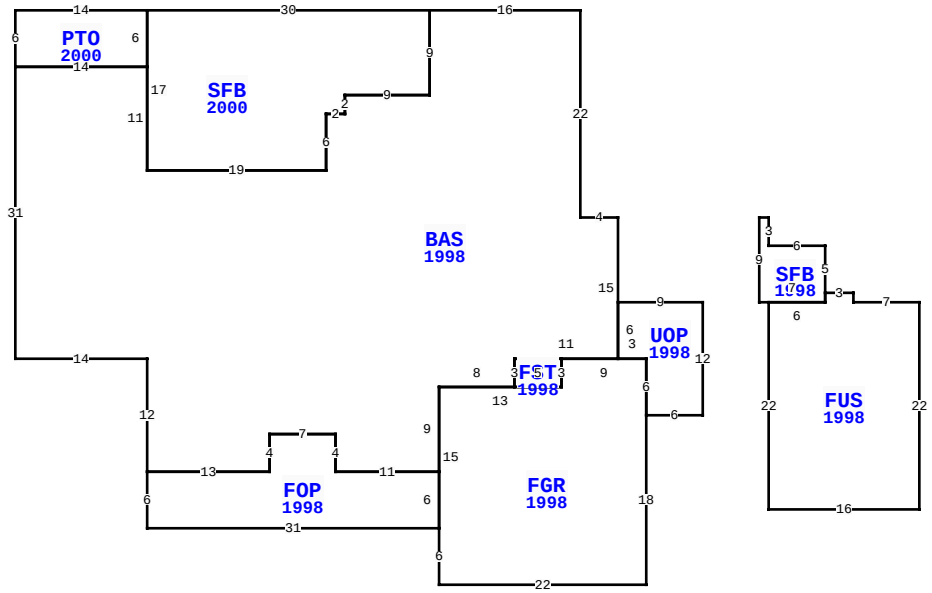


1583 CANOPY DR, FERNANDINA BEACH

| | | | |
|---|---|---|---|
| BLD DATE | | LGL DATE | |
| XF DATE | | LAND DATE | |
| INC DATE | | AG DATE | |

## VALUATION SUMMARY

| | | |
|---|---|---|
| VALUATION BY | | STANDARD |
| Tax Group: 2 | Tax Dist: | |
| BUILDING MARKET VALUE | | 565,346 |
| TOTAL MARKET OB/XF VALUE | | 0 |
| TOTAL LAND VALUE - MARKET | | 210,000 |
| TOTAL MARKET VALUE | | 775,346 |
| SOH/AGL Deduction | | 435,603 |
| ASSESSED VALUE | | 339,743 |
| TOTAL EXEMPTION VALUE | HX HB | 51,411 |
| BASE TAXABLE VALUE | | 288,332 |
| TOTAL JUST VALUE | | 775,346 |
| NCON VALUE | | 0 |
| INCOME VALUE | | |
| PREVIOUS YEAR MKT VALUE | | 756,836 |

| PERMIT NUM | DESCRIPTION | AMT | ISSUED |
|---|---|---|---|
| 20210745 | REPAIR/RRF | 0 | 10/28/2021 |
| 20111890 | HUR SHUT | 18,355 | 10/20/2011 |
| 20110769 | ELEC OTHER | 100 | 05/19/2011 |
| B2003952 | ADDITION | 18,000 | 09/13/2000 |
| B972452 | NEW CONSTR | 160,000 | 01/06/1998 |

## SALES DATA

| OFF RECORD Number | DATE | TYPE INST | Q / U | V / I | RSN CD | SALE PRICE |
|---|---|---|---|---|---|---|
| 1714/0414 | 11/12/2010 | TD | U | I | 11 | 100 |
| GRANTOR: MITCHELL CHESTER C & | | | | | | |
| GRANTEE: WILSON ELIZABETH F | | | | | | |
| 1710/0691 | 11/12/2010 | TD | Q | I | 02 | 391,500 |
| GRANTOR: MITCHELL CHESTER C & | | | | | | |
| GRANTEE: WILSON ELIZABETH F | | | | | | |

## BUILDING NOTES

## BUILDING DIMENSIONS

BAS=[YR=1998] W4 N22 W16 SFB=[YR=2000] W30 PTO=[YR=2000] W14 S6 E14 N6 $ S17 E19 N6 E2 N2 E9 N9 $ S9 W9 S2 W2 S6 W19 N11 W14 S31 E14 S12 FOP=[YR=1998] S6 E31 FGR=[YR=1998] S6 E22 N18 UOP=[YR=1998] E6 N12 W9 S6 E3 S6 $ N6 W9 FST=[YR=1998] W5 S3 E5 N3 $ S3 W13 S15 $ N6 W11 N4 W7 S4 W13 $ E13 N4 E7 S4 E11 N9 E8 N3 E11 N15 $ PTR= E15 SFB=[YR=1998] E1 S3 E6 S5 FUS=[YR=1998] E3 S1 E7 S22 W16 N22 E6 N1 $ S1 W7 N9 $ W15 $.

## EXTRA FEATURES

| L N | OB/XF CODE | DESCRIPTION | BLD | CAP | L | W | UNITS | UT | Adj R | ADJ UNIT PRICE | ORIG COND | YEAR ON | YEAR ACTUAL | Q | % COND | OB/XF MKT VALUE | NOTES |
|---|---|---|---|---|---|---|---|---|---|---|---|---|---|---|---|---|---|

## LAND DESCRIPTION

TOTAL OB/XF 0

| L N | USE CODE | CLS | LAND USE DESCRIPTION | CAP | R D | LOC ZONE | FRONT | DEPTH | TOT LND UTS | UNIT TYPE | D T | DPTH FACT | % COND | TOT ADJ | UNIT PRICE | ADJ UNIT PRICE | LAND VALUE | OTHER ADJUSTMENTS AND NOTES | YEAR | DENSITY | DECL | FRZ | YR | CONSRV |
|---|---|---|---|---|---|---|---|---|---|---|---|---|---|---|---|---|---|---|---|---|---|---|---|---|
| 1 | 000134 | C | RES POND | 100 | | R1-G | 0.00 | 0.00 | 1.00 | UT | | 1.00 | 1.00 | 1.05 | 200,000.00 | 210,000.00 | 210,000 | | | | | | | |

REVIEW DATE 01/01/2023 BY CD Total Acres: 0.00 Total Land Value: 210,000 Market: 0 Agricultural: 0 Common: 210,000 PRINTED 07/09/2026 BY SYS