BLOCK 9 LOT 5
THE PARK PB 4/28

SMYK LIVING TRUST/SMYK LORRAINE A TRUSTEE
1740 LESLIE CT
FERNANDINA BEACH, FL 32034

2026

00-00-31-1630-0009-0050

BUILDING CHARACTERISTICS

ELEMENT	CD	CONSTRUCTION
Exterior Wall	10	ABOVE AVG 50
Exterior Wall	17	CB STUCCO 50
Roof Structur	03	GABLE/HIP 100
Roof Cover	03	COMP SHNGL 100
Interior Wall	05	DRYWALL 100
Interior Floo	15	HARDTILE 70
Interior Floo	12	HARDWOOD 30
Air Condition	03	CENTRAL 100
Heating Type	04	AIR DUCTED 100
Bedrooms		3 100
Bathrooms		2.5 100
Frame	03	MASONRY 100
Stories	2.	2. 100
Units		0 100
Occupancy	00	NONE 100
Quality	04	Quality Level 04
DOR CODE	0100	SINGLE FAMILY
MAP NUM		MKT AREA 01
NEIGHBORHOOD/LOC	1040.00	

AREA TYPE	TOTAL GROSS AREA	PCT OF BASE	YEAR	TOT ADJ AREA	SUBAREA MARKET VALUE
BAL	382	15	2019	57	8,445
BAS	552	100	1996	552	81,785
FGR	716	55	1996	394	58,375
FOP	28	30	1993	8	1,185
FOP	56	30	1996	17	2,519
FUS	1,268	100	1996	1,268	187,867
PTO	310	5	1996	16	2,370
STR	52	10	2019	5	741
STR	68	10	2019	7	1,037
USP	110	30	2019	33	4,890
TOTALS	3,672			2,396	354,992

MARKET ADJUSTMENTS

TYPE	MDL	EFF. AREA	TOT ADJ PTS	EFF. BASE RATE	REPL. COST NEW	AYB	EYB	ECON	FNCT		NORM	% COND
0900	01	2,396	123.5829	171.78	411,585	1996	1997	0	0	0	13.75	86.25

1 SNGL FAM 100% - 2008 Heated Area: 1820 HX Base Yr 2008

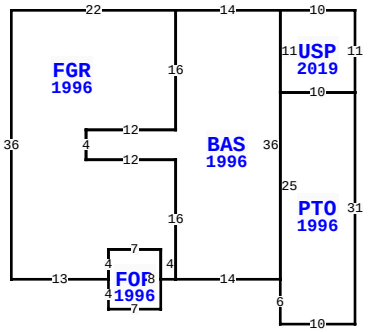

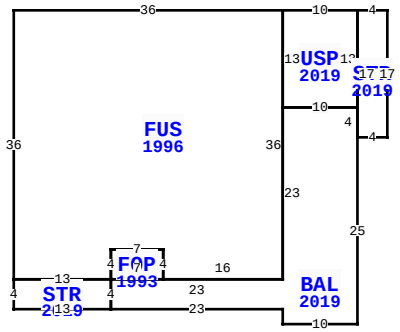

** This building has 11 Sub-Areas

1740 LISA AVE, FERNANDINA BEACH

BLD DATE		LGL DATE	
XF DATE		LAND DATE	
INC DATE		AG DATE	

NASSAU COUNTY PROPERTY

PAGE 1 of 1 2

VALUATION SUMMARY

VALUATION BY		STANDARD
Tax Group: 2	Tax Dist:	
BUILDING MARKET VALUE		354,992
TOTAL MARKET OB/XF VALUE		43,724
TOTAL LAND VALUE - MARKET		400,000
TOTAL MARKET VALUE		798,716
SOH/AGL Deduction		443,680
ASSESSED VALUE		355,036
TOTAL EXEMPTION VALUE	HX HB WX	56,411
BASE TAXABLE VALUE		298,625
TOTAL JUST VALUE		798,716
NCON VALUE		0
INCOME VALUE		
PREVIOUS YEAR MKT VALUE		757,326

PERMIT NUM	DESCRIPTION	AMT	ISSUED
20190434	DECK	0	07/25/2019
10561	SWIM POOL	16,100	06/23/1997
9885-B	NEW CONSTR	85,333	06/20/1996

SALES DATA

OFF RECORD Number	DATE	TYPE INST	Q / U	V / I	RSN CD	SALE PRICE
2478/1018	7/01/2021	QC	U	I	11	100
GRANTOR: SMYK BRUCE C & LORRAI						
GRANTEE: SMYK LIVING TRUST						
1408/1754	5/02/2006	WD	U	I	20	570,000
GRANTOR: BRANTLEY KEITH A						
GRANTEE: SMYK BRUCE C & LORR						

BUILDING NOTES

BUILDING DIMENSIONS

USP=[YR=2019] W10 BAS=[YR=1996] W14 FGR=[YR=1996] W22 S36 E13 FOP=[YR=1996] S4 E7 N8 W7 S4 $ N4 E7 S4 E2 N16 W12 N4 E12 N16$ S16 W12 S4 E12 S16 E14 PTO=[YR=1996] S6 E10 N31 W10 S25$ N36 $ S11 E10 N11$ PTR= E25 FUS=[YR=1996] E36 USP=[YR=2019] E10 STR=[YR=2019] E4 S17 W4 BAL=[YR=2019] S25 W10 N2 W23 STR=[YR=2019] W13 N4 E13 FOP=[YR=1993] E7 N4 W7 S4$ S4$ N4 E23 N23 E10 S4$ N17$ S13 W10 N13$ S36 W16N4 W7 S4 W13 N36 $ W25 $.

EXTRA FEATURES

LN	OB/XF CODE	DESCRIPTION	BLD	CAP	L	W	UNITS	UT	Adj R	ADJ UNIT PRICE	ORIG COND	YEAR ON	YEAR ACTUAL	Q	% COND	OB/XF MKT VALUE	NOTES
2	0820	WOOD WALK	0	100	28	3	84.00	SF	23.50	23.50	100	2019	2019	3	62	1,224	
3	0860	POOL/SPA	0	100	0	0	1.00	UT	50,000.00	50,000.00	100	1997	1997	04	85	42,500	

LAND DESCRIPTION

TOTAL OB/XF 43,724

LN	USE CODE	CLS	LAND USE DESCRIPTION	CAP	RD	LOC ZONE	FRONT	DEPTH	TOT LND UTS	UNIT TYPE	DT	DPTH FACT	% COND	TOT ADJ	UNIT PRICE	ADJ UNIT PRICE	LAND VALUE	OTHER ADJUSTMENTS AND NOTES	YEAR	DENSITY	DECL	FRZ	YR	CONSRV
1	000100	C	RES	100	0006	R-1	0.00	0.00	1.00	LT		1.00	1.00	1.00	400,000.00	400,000.00	400,000							

REVIEW DATE 01/01/2023 BY CD Total Acres: 0.00 Total Land Value: 400,000 Market: 0 Agricultural: 0 Common: 400,000 PRINTED 07/09/2026 BY SYS