LOT 6
IN OR 2508/457
REPLAT OF OUT LOT 186

DAVIS MICHAEL B L/E/
17 S 17TH STREET
FERNANDINA BEACH, FL 32034

2026

00-00-31-1620-0006-0000

NASSAU COUNTY PROPERTY

BUILDING CHARACTERISTICS

ELEMENT	CD	CONSTRUCTION
Exterior Wall	12	CEDAR 100
Roof Structur	03	GABLE/HIP 100
Roof Cover	03	COMP SHNGL 100
Interior Wall	05	DRYWALL 100
Interior Floo	12	HARDWOOD 100
Air Condition	03	CENTRAL 100
Heating Type	04	AIR DUCTED 100
Bedrooms		3 100
Bathrooms		2 100
Frame	02	WOOD FRAME 100
Stories	1.5	1.5 100
Units		0 100
BUD8 Adjustme	02	DIST FB 100
Occupancy	00	NONE 100
Quality	03	Quality Level 03
DOR CODE	0100	SINGLE FAMILY
MAP NUM		MKT AREA 01
NEIGHBORHOOD/LOC	1008.00	

AREA TYPE	TOTAL GROSS AREA	PCT OF BASE	YEAR	TOT ADJ AREA	SUBAREA MARKET VALUE
BAS	1,030	100	1993	1,030	91,105
FOP	24	30	1993	7	619
FSP	171	40	1993	68	6,015
FUS	290	100	1993	290	25,651
TOTALS	1,515			1,395	123,391

MARKET ADJUSTMENTS

TYPE	MDL	EFF. AREA	TOT ADJ PTS	EFF. BASE RATE	REPL. COST NEW	AYB	EYB	ECON	FNCT		NORM	% COND
0100	01	1,395	124.8000	131.04	182,801	1940	1960	0	0	0	32.50	67.50

1 SINGLE FAM 100% - 2021 Heated Area: 1320 HX Base Yr 2021

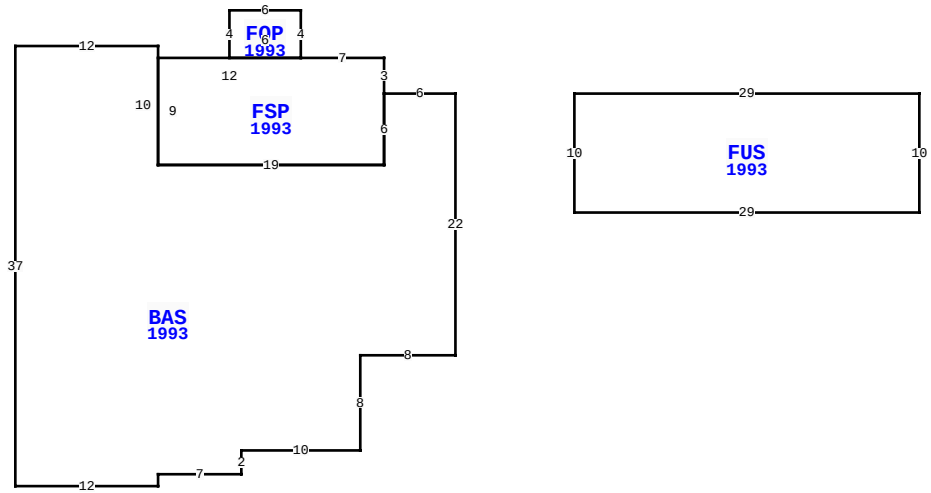

17 S 17TH ST, FERNANDINA BEACH

BLD DATE		LGL DATE	
XF DATE		LAND DATE	03/25/2024 MLU
INC DATE		AG DATE	

VALUATION SUMMARY

VALUATION BY		STANDARD
Tax Group: 2	Tax Dist:	
BUILDING MARKET VALUE		123,391
TOTAL MARKET OB/XF VALUE		3,071
TOTAL LAND VALUE - MARKET		235,200
TOTAL MARKET VALUE		361,662
SOH/AGL Deduction		121,360
ASSESSED VALUE		240,302
TOTAL EXEMPTION VALUE	HX HB	51,411
BASE TAXABLE VALUE		188,891
TOTAL JUST VALUE		361,662
NCON VALUE		0
INCOME VALUE		
PREVIOUS YEAR MKT VALUE		359,208

PERMIT NUM	DESCRIPTION	AMT	ISSUED
7269	REPAIR/RRF	1,700	08/14/1992
7225	REMODEL	6,500	07/28/1992
4963	ADDITION	5,000	08/03/1988

SALES DATA

OFF RECORD Number	DATE	TYPE INST	Q / U	V / I	RSN CD	SALE PRICE
2508/0457	10/05/2021	LE	U	I	11	100
GRANTOR: DAVIS MICHAEL B						
GRANTEE: DAVIS KATHERINE VIC						
0741/1161	10/16/1995	QC	Q	I	06	100
GRANTOR: SEGOVIA KATHERINE VIC						
GRANTEE: DAVIS MICHAEL B						

BUILDING NOTES

BUILDING DIMENSIONS

BAS=[YR=1993] W6 FSP=[YR=1993] N3 W7 FOP=[YR=1993] N4 W6 S4 E6$ W12 S9 E19 N6$ S6 W19 N10 W12 S37 E12 N1 E7 N2 E10 N8 E8 N22$ PTR= E10 FUS=[YR=1993] E29 S10W29 N10$ W10$.

EXTRA FEATURES

LN	OB/XF CODE	DESCRIPTION	BLD	CAP	L	W	UNITS	UT	Adj R	ADJ UNIT PRICE	ORIG COND	YEAR ON	YEAR ACTUAL	Q	% COND	OB/XF MKT VALUE	NOTES
1	0510	GARAGE WD-	0	100	21	19	399.00	SF	35.00	35.00	100	1960	1960	3	20	2,793	
3	1242	WD DECK A	0	100	0	0	119.00	SF	10.00	10.00	100	1988	1988	3	20	238	
5	1242	WD DECK A	0	100	5	4	20.00	SF	10.00	10.00	100	1988	1988	3	20	40	

LAND DESCRIPTION

TOTAL OB/XF 3,071

LN	USE CODE	CLS	LAND USE DESCRIPTION	CAP	RD	LOC ZONE	FRONT	DEPTH	TOT LND UTS	UNIT TYPE	DT	DPTH FACT	% COND	TOT ADJ	UNIT PRICE	ADJ UNIT PRICE	LAND VALUE	OTHER ADJUSTMENTS AND NOTES	YEAR	DENSITY	DECL	FRZ	YR	CONSRV
1	000100	C	RES	100		R-1	75.00	137.00	75.00	FF	1	1.12	1.00	1.12	2,800.00	3,136.00	235,200							

REVIEW DATE 01/01/2023 BY CD Total Acres: 0.00 Total Land Value: 235,200 Market: 0 Agricultural: 0 Common: 235,200 PRINTED 07/09/2026 BY SYS