LOT 4
COASTAL COTTAGES PBK 8/161

NARAYANAN FAMILY TRUST/NARAYANAN MARY ANN TRUSTEE
1423 COASTAL OAKS DRIVE
FERNANDINA BEACH, FL 32034

2026

00-00-31-1612-0004-0000

NASSAU COUNTY PROPERTY

BUILDING CHARACTERISTICS

ELEMENT	CD	CONSTRUCTION
Exterior Wall	10	ABOVE AVG 100
Roof Structur	08	IRREGULAR 100
Roof Cover	03	COMP SHNGL 100
Interior Wall	05	DRYWALL 100
Interior Floo	12	HARDWOOD 60
Interior Floo	14	CARPET 40
Air Condition	03	CENTRAL 100
Heating Type	04	AIR DUCTED 100
Bedrooms		3 100
Bathrooms		2.5 100
Frame	02	WOOD FRAME 100
Stories	1.5	1.5 100
Units		0 100
Quality	04	Quality Level 04

DOR CODE 0100 SINGLE FAMILY
MAP NUM | MKT AREA 01
NEIGHBORHOOD/LOC 1211.00

AREA TYPE	TOTAL GROSS AREA	PCT OF BASE	YEAR	TOT ADJ AREA	SUBAREA MARKET VALUE
BAS	1,242	100	2018	1,242	149,689
FGR	529	55	2018	291	35,072
FOP	77	30	2018	23	2,772
FSP	110	40	2018	44	5,303
FUS	594	100	2018	594	71,591
STR	36	10	2018	4	482
TOTALS	2,588			2,198	264,909

MARKET ADJUSTMENTS

TYPE	MDL	EFF. AREA	TOT ADJ PTS	EFF. BASE RATE	REPL. COST NEW	AYB	EYB	ECON	FNCT		NORM	% COND
0320	01	2,198	118.3350	124.25	273,102	2018	2018	0	0	0	3.00	97.00

1 TOWNHOUSE 100% - 2019 Heated Area: 1836 HX Base Yr 2019

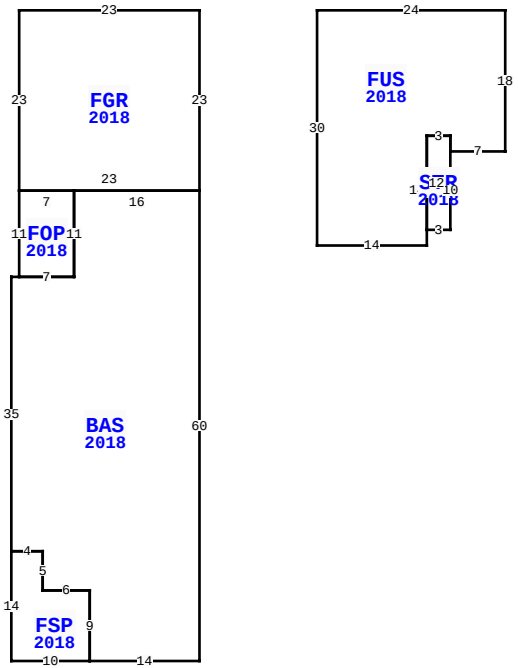

1423 COASTAL OAKS DR, FERNANDINA BEACH

BLD DATE		LGL DATE	
XF DATE		LAND DATE	05/04/2026 MLU
INC DATE		AG DATE	

VALUATION SUMMARY

VALUATION BY		STANDARD
Tax Group: 2	Tax Dist:	
BUILDING MARKET VALUE		264,909
TOTAL MARKET OB/XF VALUE		0
TOTAL LAND VALUE - MARKET		230,000
TOTAL MARKET VALUE		494,909
SOH/AGL Deduction		185,288
ASSESSED VALUE		309,621
TOTAL EXEMPTION VALUE	HX HB WX	56,411
BASE TAXABLE VALUE		253,210
TOTAL JUST VALUE		494,909
NCON VALUE		0
INCOME VALUE		
PREVIOUS YEAR MKT VALUE		544,768

PERMIT NUM	DESCRIPTION	AMT	ISSUED
20172740	CO ISSUED	0	07/27/2018
20172740	NEW CONSTR	238,535	09/01/2017

SALES DATA

OFF RECORD Number	DATE	TYPE INST	Q / U	V / I	RSN CD	SALE PRICE
2399/0041	10/06/2020	WD	U	I	11	100
GRANTOR: NARAYANAN RAMABHADRAN						
GRANTEE: NARAYANAN FAMILY TR						
2209/1703	7/11/2018	WD	Q	I	02	319,100
GRANTOR: W R HOWELL COMPANY						
GRANTEE: NARAYANAN RAMABHADR						

BUILDING NOTES

BUILDING DIMENSIONS

BAS=[YR=2018;ORIG=-23,34] W1 S35 E4 S5 E6 S9 E14 N60 W16 S11 W7 $
FUS=[YR=2018;ORIG=15,0] E24 S18 W7 N2 W3 S14 W14 N30 $
FGR=[YR=2018;ORIG=0,0] W23 S23 E23 N23 $
FSP=[YR=2018;ORIG=-24,69] S14 E10 N9 W6 N5 W4 $
FOP=[YR=2018;ORIG=-23,23] S11 E7 N11 W7 $
STR=[YR=2018;ORIG=32,18] S10 W3 N12 E3 S2 $
PTR=[ORIG=0,0] E15 W15 $
.

EXTRA FEATURES

L N	OB/XF CODE	DESCRIPTION	BLD	CAP	L	W	UNITS	UT	Adj R	ADJ UNIT PRICE	ORIG COND	YEAR ON	YEAR ACTUAL	Q	% COND	OB/XF MKT VALUE	NOTES

LAND DESCRIPTION

TOTAL OB/XF 0

L N	USE CODE	CLS	LAND USE DESCRIPTION	CAP	R D	LOC ZONE	FRONT	DEPTH	TOT LND UTS	UNIT TYPE	D T	DPTH FACT	% COND	TOT ADJ	UNIT PRICE	ADJ UNIT PRICE	LAND VALUE	OTHER ADJUSTMENTS AND NOTES	YEAR	DENSITY	DECL	FRZ	YR	CONSRV
1	000100	C	RES	100		MU-1	0.00	0.00	1.00	LT		1.00	1.00	1.00	230,000.00	230,000.00	230,000							

REVIEW DATE 04/03/2024 BY KBA Total Acres: 0.00 Total Land Value: 230,000 Market: 0 Agricultural: 0 Common: 230,000 PRINTED 07/09/2026 BY SYS