LOT 2
COASTAL COTTAGES PBK 8/161

SERGENT ROBERT S
130 S SERENATA DR UNIT 212
PONTE VEDRA BEACH, FL 32082

2026

00-00-31-1612-0002-0000

BUILDING CHARACTERISTICS

ELEMENT	CD	CONSTRUCTION
Exterior Wall	10	ABOVE AVG 100
Roof Structur	08	IRREGULAR 100
Roof Cover	03	COMP SHNGL 100
Interior Wall	05	DRYWALL 100
Interior Floo	12	HARDWOOD 60
Interior Floo	14	CARPET 40
Air Condition	03	CENTRAL 100
Heating Type	04	AIR DUCTED 100
Bedrooms		3 100
Bathrooms		2.5 100
Frame	02	WOOD FRAME 100
Stories	1.5	1.5 100
Units		0 100
Quality	04	Quality Level 04

DOR CODE 0100 SINGLE FAMILY
MAP NUM | MKT AREA 01
NEIGHBORHOOD/LOC 1211.00

AREA TYPE	TOTAL GROSS AREA	PCT OF BASE	YEAR	TOT ADJ AREA	SUBAREA MARKET VALUE
BAS	1,242	100	2019	1,242	150,461
FGR	529	55	2019	291	35,253
FOP	77	30	2019	23	2,787
FOP	110	30	2019	33	3,998
FUS	594	100	2019	594	71,960
STR	36	10	2019	4	485
TOTALS	2,588			2,187	264,942

MARKET ADJUSTMENTS

TYPE	MDL	EFF. AREA	TOT ADJ PTS	EFF. BASE RATE	REPL. COST NEW	AYB	EYB	ECON	FNCT		NORM	% COND
0320	01	2,187	118.3350	124.25	271,735	2019	2019	0	0	0	2.50	97.50

1 TOWNHOUSE 0% - 2024 Heated Area: 1836 HX Base Yr

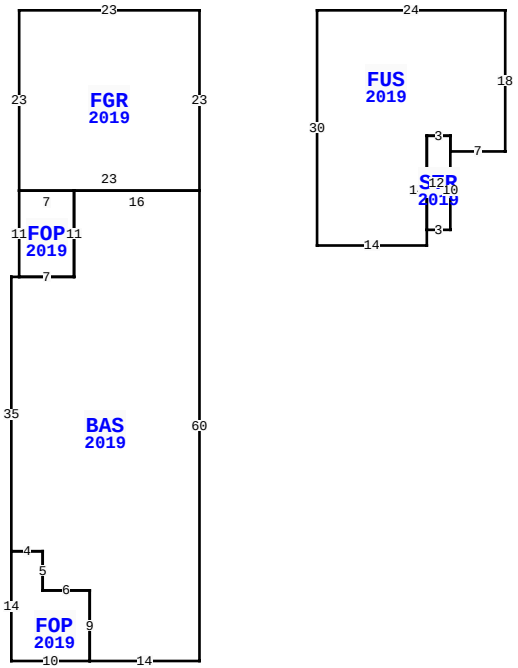

1431 COASTAL OAKS DR, FERNANDINA BEACH

BLD DATE		LGL DATE	
XF DATE		LAND DATE	05/04/2026 MLU
INC DATE		AG DATE	

NASSAU COUNTY PROPERTY

PAGE 1 of 1 2

VALUATION SUMMARY

VALUATION BY	STANDARD
Tax Group: 2	Tax Dist:
BUILDING MARKET VALUE	264,942
TOTAL MARKET OB/XF VALUE	0
TOTAL LAND VALUE - MARKET	230,000
TOTAL MARKET VALUE	494,942
SOH/AGL Deduction	0
ASSESSED VALUE	494,942
TOTAL EXEMPTION VALUE	0
BASE TAXABLE VALUE	494,942
TOTAL JUST VALUE	494,942
NCON VALUE	0
INCOME VALUE	
PREVIOUS YEAR MKT VALUE	543,783

PERMIT NUM	DESCRIPTION	AMT	ISSUED
20183036	CO ISSUED	0	03/27/2019
20183036	NEW CONSTR	248,719	08/30/2018

SALES DATA

OFF RECORD Number	DATE	TYPE INST	Q / U	V / I	RSN CD	SALE PRICE
2265/0427	3/28/2019	WD	Q	I	02	335,700
GRANTOR: W R HOWELL COMPANY						
GRANTEE: SERGENT ROBERT S &						
2222/0072	8/24/2018	WD	U	V	30	50,000
GRANTOR: COTTAGES AT COASTAL O						
GRANTEE: W R HOWELL COMPANY						

BUILDING NOTES

BUILDING DIMENSIONS

FGR=[YR=2019] W23 S23 FOP=[YR=2019] S11 BAS=[YR=2019] W1 S35 FOP=[YR=2019] S14 E10 N9 W6 N5 W4$ E4 S5 E6 S9 E14 N60 W16 S11 W7$ E7 N11 W7$ E23 N23$ PTR=E15 FUS=[YR=2019] E24 S18 W7 STR=[YR=2019] S10 W3 N12 E3 S2$ N2 W3 S14 W14 N30$ W15$.

EXTRA FEATURES

L N	OB/XF CODE	DESCRIPTION	BLD	CAP	L	W	UNITS	UT	Adj R	ADJ UNIT PRICE	ORIG COND	YEAR ON	YEAR ACTUAL	Q	% COND	OB/XF MKT VALUE	NOTES

LAND DESCRIPTION

TOTAL OB/XF 0

L N	USE CODE	CLS	LAND USE DESCRIPTION	CAP	R D	LOC ZONE	FRONT	DEPTH	TOT LND UTS	UNIT TYPE	D T	DPTH FACT	% COND	TOT ADJ	UNIT PRICE	ADJ UNIT PRICE	LAND VALUE	OTHER ADJUSTMENTS AND NOTES	YEAR	DENSITY	DECL	FRZ	YR	CONSRV
1	000100	C	RES	0		MU-1	0.00	0.00	1.00	LT		1.00	1.00	1.00	230,000.00	230,000.00	230,000							

REVIEW DATE 01/01/2023 BY CD Total Acres: 0.00 Total Land Value: 230,000 Market: 0 Agricultural: 0 Common: 230,000 PRINTED 07/09/2026 BY SYS