E153 FT OF N1/2 OF OUTLOT 229
IN OR 1715/926
OUT LOTS

EDWARDS CHARLES K & JULIE S
1820 ASH ST
FERNANDINA BEACH, FL 32034

2026

00-00-31-1600-0229-0040

NASSAU COUNTY PROPERTY

BUILDING CHARACTERISTICS

ELEMENT	CD	CONSTRUCTION
Exterior Wall	19	COMMON BRK 100
Roof Structur	03	GABLE/HIP 100
Roof Cover	03	COMP SHNGL 100
Interior Wall	03	PLASTER 100
Interior Floo	12	HARDWOOD 100
Air Condition	03	CENTRAL 100
Heating Type	04	AIR DUCTED 100
Bedrooms		3 100
Bathrooms		2 100
Frame	03	MASONRY 100
Stories	1.	1. 100
Units		0 100
BUD8 Adjustme	02	DIST FB 100
Occupancy	00	NONE 100
Quality	03	Quality Level 03
DOR CODE	0100	SINGLE FAMILY
MAP NUM		MKT AREA 01
NEIGHBORHOOD/LOC	1008.00	

AREA TYPE	TOTAL GROSS AREA	PCT OF BASE	YEAR	TOT ADJ AREA	SUBAREA MARKET VALUE
BAS	1,850	100	1993	1,850	245,713
FEP	210	80	1993	168	22,313
FOP	28	30	1993	8	1,063
FOP	100	30	1993	30	3,985
STR	12	10	1993	1	133
STR	15	10	1993	2	266
STR	16	10	1993	2	266
STR	20	10	1993	2	266
UGR	638	45	1993	287	38,119
TOTALS	2,889			2,350	312,122

MARKET ADJUSTMENTS

TYPE	MDL	EFF. AREA	TOT ADJ PTS	EFF. BASE RATE	REPL. COST NEW	AYB	EYB	ECON	FNCT		NORM	% COND
0900	01	2,350	127.4000	177.09	416,162	1960	1995	0	0	0	25.00	75.00

1 SNGL FAM 100% - 2012 Heated Area: 1850 HX Base Yr 2012

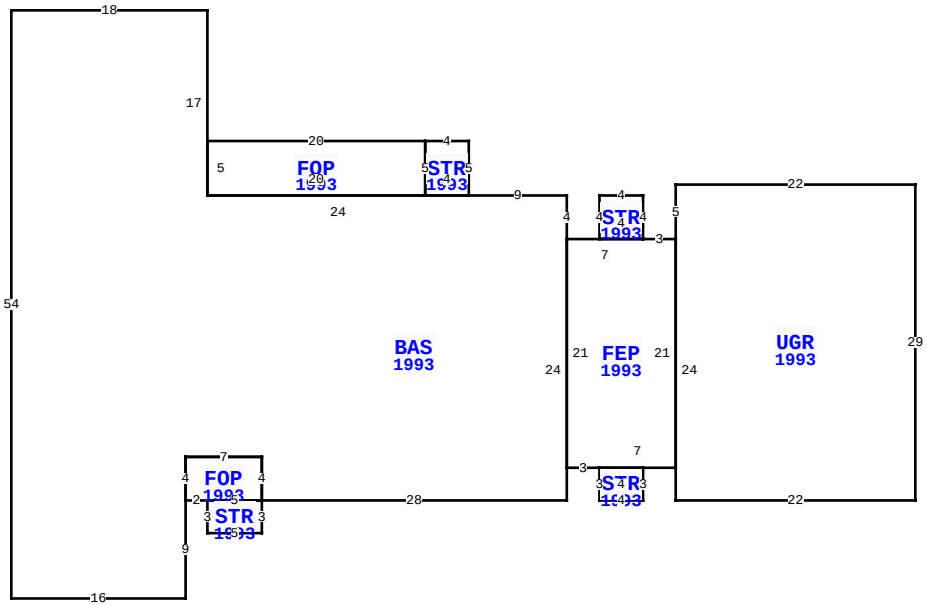

BLD DATE	04/07/2015 KK	LGL DATE	
XF DATE		LAND DATE	03/25/2024 MLU
INC DATE		AG DATE	

1820 ASH ST, FERNANDINA BEACH

VALUATION SUMMARY

VALUATION BY		STANDARD
Tax Group: 2	Tax Dist:	
BUILDING MARKET VALUE		312,122
TOTAL MARKET OB/XF VALUE		2,884
TOTAL LAND VALUE - MARKET		359,856
TOTAL MARKET VALUE		674,862
SOH/AGL Deduction		552,074
ASSESSED VALUE		122,788
TOTAL EXEMPTION VALUE	HX HB	51,411
BASE TAXABLE VALUE		71,377
TOTAL JUST VALUE		674,862
NCON VALUE		0
INCOME VALUE		
PREVIOUS YEAR MKT VALUE		664,236

PERMIT NUM	DESCRIPTION	AMT	ISSUED
20033851	REPAIR/RRF	2,000	09/18/2003
20020280	REPAIR/RRF	1,000	02/19/2002

SALES DATA

OFF RECORD Number	DATE	TYPE INST	Q / U	V / I	RSN CD	SALE PRICE
1715/0926	12/16/2010	WD	U	I	30	210,000
GRANTOR: EDWARDS CHARLES & SHI						
GRANTEE: EDWARDS CHARLES KEI						
1631/0853	6/21/2009	WD	U	I	30	100
GRANTOR: EDWARDS HAZEL F						
GRANTEE: EDWARDS HAZEL F TRU						

BUILDING NOTES

BUILDING DIMENSIONS

UGR=[YR=1993] W22S5 FEP=[YR=1993] W3 STR=[YR=1993] N4W4S4E4$W7 BAS=[YR=1993] N4 W9 STR=[YR=1993] N5W4 FOP=[YR=1993] W20S5 E20N5$S5E4$W24N17W18S54E16N9 FOP=[YR=1993] E2 STR=[YR=1993] S3E5N3W5$E5 N4W7S4$N4E7S4E28N24$S21E3 STR=[YR=1993] S3E4N3W4$ E7N21$S24E22 N29$.

EXTRA FEATURES

LN	OB/XF CODE	DESCRIPTION	BLD	CAP	L	W	UNITS	UT	Adj R	ADJ UNIT PRICE	ORIG COND	YEAR ON	YEAR ACTUAL	Q	% COND	OB/XF MKT VALUE	NOTES
1	0500	FP-PRE FAB	0	100	0	0	1.00	UT	3,500.00	3,500.00	100	1960	1960	3	20	700	
2	0940	SHEDS/PORT	0	100	14	10	140.00	SF	30.00	30.00	100	1960	1960	3	20	840	
5	0940	SHEDS/PORT	0	100	14	10	140.00	SF	30.00	30.00	100	1980	1980	3	20	840	
6	0940	SHEDS/PORT	0	100	14	12	168.00	SF	15.00	15.00	100	1960	1960	3	20	504	

LAND DESCRIPTION

TOTAL OB/XF 2,884

LN	USE CODE	CLS	LAND USE DESCRIPTION	CAP	RD	LOC ZONE	FRONT	DEPTH	TOT LND UTS	UNIT TYPE	DT	DPTH FACT	% COND	TOT ADJ	UNIT PRICE	ADJ UNIT PRICE	LAND VALUE	OTHER ADJUSTMENTS AND NOTES	YEAR	DENSITY	DECL	FRZ	YR	CONSRV
1	000100	C	RES	100	0006	R-1	153.00	137.00	153.00	FF	1	1.12	1.00	0.84	2,800.00	2,352.00	359,856							

REVIEW DATE 01/01/2023 BY CD Total Acres: 0.00 Total Land Value: 359,856 Market: 0 Agricultural: 0 Common: 359,856 PRINTED 07/09/2026 BY SYS