BLOCK 7 LOT 9
OCEAN CITY N PB 2/38

THOMPSON HENRY A & ADRIA
500 NORTH MAIN ST
STATESBORO, GA 30458

2026

00-00-31-1520-0007-0090

NASSAU COUNTY PROPERTY

BUILDING CHARACTERISTICS

ELEMENT	CD	CONSTRUCTION
Exterior Wall	14	WD SHINGLE 70
Exterior Wall	23	REINF CONC 30
Roof Structur	03	GABLE/HIP 100
Roof Cover	11	SLATE 100
Interior Wall	05	DRYWALL 100
Interior Floo	12	HARDWOOD 90
Interior Floo	15	HARDTILE 10
Air Condition	03	CENTRAL 100
Heating Type	04	AIR DUCTED 100
Bedrooms		3 100
Bathrooms		3.5 100
Frame	03	MASONRY 100
Stories	3.	3. 100
Units		0 100
Occupancy	00	NONE 100
Quality	05	Quality Level 05
DOR CODE	0100	SINGLE FAMILY
MAP NUM		MKT AREA 01
NEIGHBORHOOD/LOC	1051.00	

AREA TYPE	TOTAL GROSS AREA	PCT OF BASE	YEAR	TOT ADJ AREA	SUBAREA MARKET VALUE
BAL	381	15	2012	57	11,214
BAS	644	100	2008	644	126,694
DCK	33	10	2008	3	590
FGR	448	55	2008	246	48,395
FOP	234	30	2009	70	13,771
FUS	1,101	100	2008	1,101	216,599
FUS	1,101	100	2008	1,101	216,599
UOP	32	20	2008	6	1,180
UOP	76	20	2008	15	2,951
TOTALS	4,050			3,243	637,992

MARKET ADJUSTMENTS

TYPE	MDL	EFF. AREA	TOT ADJ PTS	EFF. BASE RATE	REPL. COST NEW	AYB	EYB	ECON	FNCT		NORM	% COND
0500	01	3,243	128.1192	212.68	689,721	2008	2010	0	0	0	7.50	92.50

1 SFR CUST 0% - 2025 Heated Area: 2846 HX Base Yr

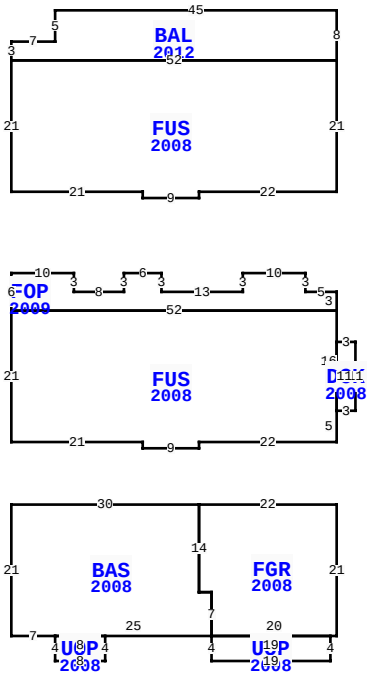

822 S FLETCHER AVE, FERNANDINA BEACH

BLD DATE		LGL DATE	
XF DATE		LAND DATE	04/27/2026 MLU
INC DATE		AG DATE	

VALUATION SUMMARY

VALUATION BY	STANDARD
Tax Group: 2	Tax Dist:
BUILDING MARKET VALUE	637,992
TOTAL MARKET OB/XF VALUE	15,774
TOTAL LAND VALUE - MARKET	1,575,000
TOTAL MARKET VALUE	2,228,766
SOH/AGL Deduction	0
ASSESSED VALUE	2,228,766
TOTAL EXEMPTION VALUE	0
BASE TAXABLE VALUE	2,228,766
TOTAL JUST VALUE	2,228,766
NCON VALUE	0
INCOME VALUE	
PREVIOUS YEAR MKT VALUE	2,057,266

PERMIT NUM	DESCRIPTION	AMT	ISSUED
20111817	EXTEND DECKS & SP	50,000	10/10/2011
20071727	GAS	650	09/12/2007
20071437	STANDING SEAM ROO	11,000	08/02/2007
20071360	H/AC	8,000	07/23/2007
20070734	NEW CONSTR	8,000	04/27/2007
20070554	NEW CONSTR	10,000	04/09/2007

SALES DATA

OFF RECORD Number	DATE	TYPE INST	Q U	V I	RSN CD	SALE PRICE
2725/440	7/17/2024	WD	Q	I	02	2,350,000
GRANTOR: DILLON ANGELA G						
GRANTEE: THOMPSON HENRY A &						
1698/1057	9/09/2010	WD	Q	I	01	950,000
GRANTOR: THE NAUTICAL GROUP LL						
GRANTEE: DILLON DONALD G & A						

BUILDING NOTES

BUILDING DIMENSIONS

FGR=[YR=2008] W22 BAS=[YR=2008] W30S21E7 UOP=[YR=2008] S4E8N4W8$ E25N7W2N14$ S14E2S7UOP=[YR=2008] S4E19N4W19$E20 N21$ PTR=N10 FUS=[YR=2008] N5 DCK=[YR=2008] E3N11W3S11$N16 FOP=[YR=2009] N3W5 N3W10S3 W13 N3W6 S3 W8 N3W10S6E52$ W52S21E21 S1 E9N1E22$ S10$ PTR=N50 FUS=[YR=2008] N21 BAL=[YR=2012] N8 W45S5W7S3E52$ W52S21E21S1E9N1E22$ S50$.

EXTRA FEATURES

LN	OB/XF CODE	DESCRIPTION	BLD	CAP	L	W	UNITS	UT	Adj R	ADJ UNIT PRICE	ORIG COND	YEAR ON	YEAR ACTUAL	Q	% COND	OB/XF MKT VALUE	NOTES
1	0409	ELEVATOR R	0	0	0	0	1.00	UT	11,730.00	11,730.00	100	2008	2008	3	100	11,730	
2	0416	DUNEWALKS	0	0	46	4	184.00	SF	18.00	18.00	100	2008	2008	3	27	894	
6	0500	FP-PRE FAB	0	0	0	0	1.00	UT	3,500.00	3,500.00	100	2008	2008	3	90	3,150	

LAND DESCRIPTION

TOTAL OB/XF 15,774

LN	USE CODE	CLS	LAND USE DESCRIPTION	CAP	RD	LOC ZONE	FRONT	DEPTH	TOT LND UTS	UNIT TYPE	DT	DPTH FACT	% COND	TOT ADJ	UNIT PRICE	ADJ UNIT PRICE	LAND VALUE	OTHER ADJUSTMENTS AND NOTES	YEAR	DENSITY	DECL	FRZ	YR	CONSRV
1	000120	C	RES OCEAN	0	0006	R-1	75.00	93.00	75.00	FF		1.00	1.00	1.00	21,000.00	21,000.00	1,575,000							

REVIEW DATE 01/01/2023 BY CD Total Acres: 0.00 Total Land Value: 1,575,000 Market: 0 Agricultural: 0 Common: 1,575,000 PRINTED 07/09/2026 BY SYS