LOT 3
FIRST REPLAT OF THE ISLANDS
CLUB SUBDIVISION PBK 8/306

VALDESUSO RICHARD & VIRGINIA L/E/
2757 SEA ISLAND TRC
FERNANDINA BEACH, FL 32034

2026

00-00-31-142R-0003-0000

BUILDING CHARACTERISTICS

ELEMENT	CD	CONSTRUCTION
Exterior Wall	31	HARDIE BRD 100
Roof Structur	03	GABLE/HIP 100
Roof Cover	13	STAND SEAM 100
Interior Wall	05	DRYWALL 100
Interior Floo	13	LVT/LAMNT 100
Interior Floo	14	CARPET 0
Air Condition	03	CENTRAL 100
Heating Type	04	AIR DUCTED 100
Bedrooms		4 100
Bathrooms		4 100
Frame	02	WOOD FRAME 70
Frame	04	REIN CONC 30
Stories	3.	3. 100
Units		0 100
Occupancy	00	NONE 100
Quality	04	Quality Level 04
DOR CODE	0100	SINGLE FAMILY
MAP NUM		MKT AREA 01
NEIGHBORHOOD/LOC	1025.0100	

AREA TYPE	TOTAL GROSS AREA	PCT OF BASE	YEAR	TOT ADJ AREA	SUBAREA MARKET VALUE
BAS	722	100	2024	722	234,403
FGR	644	55	2024	354	114,929
FOP	27	30	2024	8	2,597
FOP	40	30	2024	12	3,895
FOP	45	30	2024	14	4,545
FOP	368	30	2024	110	35,713
FOP	368	30	2024	110	35,713
FOP	368	30	2024	110	35,713
FUS	1,235	100	2024	1,235	400,953
FUS	1,247	100	2024	1,247	404,850
TOTALS	5,176			3,934	1,277,207

MARKET ADJUSTMENTS

TYPE	MDL	EFF. AREA	TOT ADJ PTS	EFF. BASE RATE	REPL. COST NEW	AYB	EYB	ECON	FNCT		NORM	% COND
0500	12	3,934	196.5600	326.29	1,283,625	2023	2023	0	0	0	0.50	99.50

1 SFR CUST 100% - 2024 Heated Area: 3204 HX Base Yr 2024

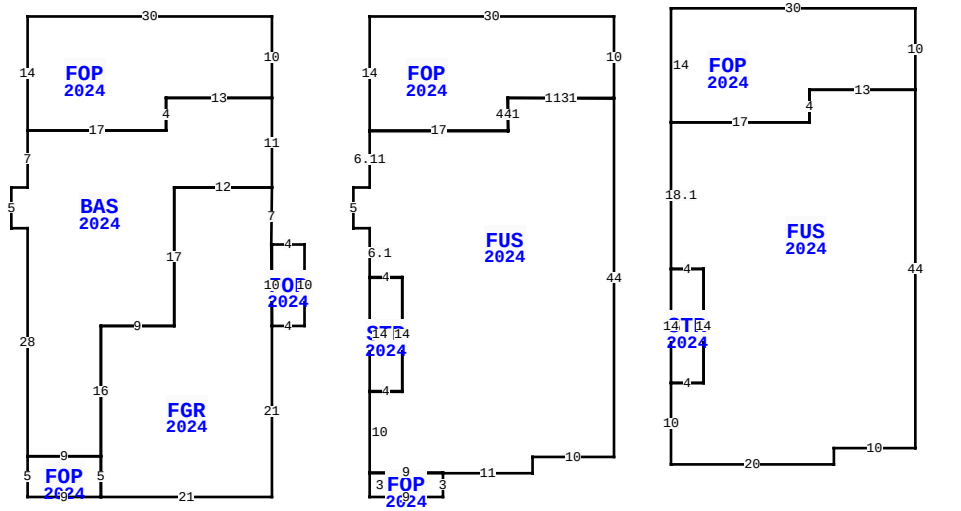

** This building has 12 Sub-Areas

2757 SEA ISLAND TRC, FERNANDINA BEACH

BLD DATE		LGL DATE	
XF DATE		LAND DATE	03/20/2024 MLU
INC DATE		AG DATE	

NASSAU COUNTY PROPERTY

PAGE 1 of 1 2

VALUATION SUMMARY

VALUATION BY		STANDARD
Tax Group: 2	Tax Dist:	
BUILDING MARKET VALUE		1,277,207
TOTAL MARKET OB/XF VALUE		60,200
TOTAL LAND VALUE - MARKET		375,000
TOTAL MARKET VALUE		1,712,407
SOH/AGL Deduction		471,525
ASSESSED VALUE		1,240,882
TOTAL EXEMPTION VALUE	HX HB	51,411
BASE TAXABLE VALUE		1,189,471
TOTAL JUST VALUE		1,712,407
NCON VALUE		0
INCOME VALUE		
PREVIOUS YEAR MKT VALUE		1,664,323

PERMIT NUM	DESCRIPTION	AMT	ISSUED
2024-0127	POOL	93,000	04/12/2024
2021-1813	CO		10/12/2023
20211813	T4408 H3063	859,470	02/28/2022

SALES DATA

OFF RECORD Number	DATE	TYPE INST	Q / U	V / I	RSN CD	SALE PRICE
2834/1950	12/11/2025	LE	U	I	11	100
GRANTOR: VALDESUSO RICHARD & V						
GRANTEE: VALDESUSO FAMILY TR						
2412/1247	11/30/2020	WD	Q	V	01	250,000
GRANTOR: ISLAND CLUB AMELIA LL						
GRANTEE: VALDESUSO RICHARD &						

BUILDING NOTES

BUILDING DIMENSIONS

FUS=[YR=2024;ORIG=-6,13.1] E17 U4.1L0.1 D0.1R13.1 S44 W10 S2 W11 W9 N10 E4 N14 W4 N6.1 W2 N5 E2 N6.11 $
FUS=[YR=2024;ORIG=31,12] E17 N4 E13 S44 W10 S2 W20 N10 E4 N14 W4 N18.1 $
BAS=[YR=2024;ORIG=-18,9] W13 S4 W17 S7 W2 S5 E2 S28 E9 N16 E9 N17 E12 N11 $
FGR=[YR=2024;ORIG=-30,37] W9 S16 S5 E21 N21 U10L0.1 U7R0.1 W12 S17 $
FOP=[YR=2024;ORIG=24,9] W13 S4 W17 N14 E30 S10 $
FOP=[YR=2024;ORIG=-48,13] E17 N4 E13 N10 W30 S14 $
FOP=[YR=2024;ORIG=31,-2] E30 S10 W13 S4 W17 N14 $
STR=[YR=2024;ORIG=-6,31] E4 S14 W4 N14 $

EXTRA FEATURES

LN	OB/XF CODE	DESCRIPTION	BLD	CAP	L	W	UNITS	UT	Adj R	ADJ UNIT PRICE	ORIG COND	YEAR ON	YEAR ACTUAL	Q	% COND	OB/XF MKT VALUE	NOTES
2	0409	ELEVATOR R	1	100	0	0	1.00	UT	10,200.00	10,200.00	100	2024	2023		100	10,200	
3	0860	POOL/SPA	0	100	0	0	1.00	UT	50,000.00	50,000.00	100	2025	2024	04	100	50,000	

LAND DESCRIPTION

TOTAL OB/XF 60,200

LN	USE CODE	CLS	LAND USE DESCRIPTION	CAP	RD	LOC ZONE	FRONT	DEPTH	TOT LND UTS	UNIT TYPE	DT	DPTH FACT	% COND	TOT ADJ	UNIT PRICE	ADJ UNIT PRICE	LAND VALUE	OTHER ADJUSTMENTS AND NOTES	YEAR	DENSITY	DECL	FRZ	YR	CONSRV
1	000100	C	RES	100		R-3	0.00	0.00	1.00	LT		1.00	1.00	1.00	375,000.00	375,000.00	375,000							

REVIEW DATE 11/12/2024 BY DJ Total Acres: 0.00 Total Land Value: 375,000 Market: 0 Agricultural: 0 Common: 375,000 PRINTED 07/09/2026 BY SYS