BLOCK 8A LOT 9
IN OR 857/216
INTERLACHEN-BY-THE-SEA-REPLAT

COLETTI PHILIP L & KATHLEEN M
1746 N FLETCHER AVE
FERNANDINA BEACH, FL 32034

2026

00-00-31-1401-008A-0090

NASSAU COUNTY PROPERTY

BUILDING CHARACTERISTICS

ELEMENT	CD	CONSTRUCTION
Exterior Wall	12	CEDAR 70
Exterior Wall	17	CB STUCCO 30
Roof Structur	08	IRREGULAR 100
Roof Cover	12	MODULAR MT 100
Interior Wall	05	DRYWALL 100
Interior Floo	11	CLAY TILE 100
Air Condition	03	CENTRAL 100
Heating Type	04	AIR DUCTED 100
Bedrooms		6 100
Bathrooms		6.5 100
Frame	03	MASONRY 100
Stories	3.	3. 100
Units		0 100
Quality	03	Quality Level 03
DOR CODE	0100	SINGLE FAMILY
MAP NUM		MKT AREA 01
NEIGHBORHOOD/LOC	1050.00	

AREA TYPE	TOTAL GROSS AREA	PCT OF BASE	YEAR	TOT ADJ AREA	SUBAREA MARKET VALUE
BAL	72	15	2020	11	2,767
BAL	294	15	2020	44	11,066
FGR	435	55	2020	239	60,111
FGR	867	55	2020	477	119,971
FOP	418	30	2020	125	31,439
FOP	418	30	2020	125	31,439
FOP	580	30	2020	174	43,763
FOP	600	30	2020	180	45,272
FST	35	55	2020	19	4,778
FUS	1,729	100	2020	1,729	434,863
TOTALS	9,085			5,729	1,440,907

MARKET ADJUSTMENTS

TYPE	MDL	EFF. AREA	TOT ADJ PTS	EFF. BASE RATE	REPL. COST NEW	AYB	EYB	ECON	FNCT		NORM	% COND
0500	11	5,729	155.3972	257.96	1,477,853	2020	2020	0	0	0	2.50	97.50

2 SFR CUST 100% - 2021 Heated Area: 4263 HX Base Yr 2021

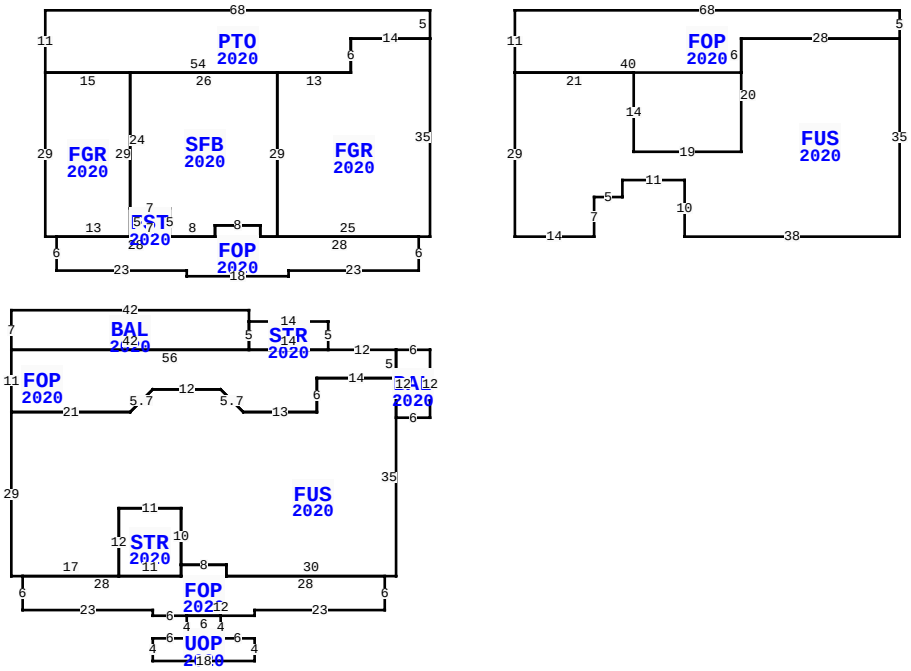

** This building has 16 Sub-Areas

1746 N FLETCHER AVE, FERNANDINA BEACH

BLD DATE	03/24/2014 KK	LGL DATE	
XF DATE		LAND DATE	04/28/2026 MLU
INC DATE		AG DATE	

VALUATION SUMMARY

VALUATION BY		STANDARD
Tax Group: 2	Tax Dist:	
BUILDING MARKET VALUE		1,440,907
TOTAL MARKET OB/XF VALUE		18,401
TOTAL LAND VALUE - MARKET		2,756,250
TOTAL MARKET VALUE		4,215,558
SOH/AGL Deduction		1,756,066
ASSESSED VALUE		2,459,492
TOTAL EXEMPTION VALUE	HX HB	51,411
BASE TAXABLE VALUE		2,408,081
TOTAL JUST VALUE		4,215,558
NCON VALUE		0
INCOME VALUE		
PREVIOUS YEAR MKT VALUE		3,910,264

PERMIT NUM	DESCRIPTION	AMT	ISSUED
20190005	CO ISSUED	0	04/16/2020
20184200	NEW CONSTR	641,184	12/13/2018
20181074	DEMOLITION	25,000	03/29/2018
20100883	H/AC	3,800	05/28/2010
20071182	REPAIR/RRF	7,800	06/26/2007
20051532	REPAIR/RRF	2,000	04/08/2005

SALES DATA

OFF RECORD Number	DATE	TYPE INST	Q U	V I	RSN CD	SALE PRICE
0857/0216	11/30/1998	WD	Q	I		540,500
GRANTOR: ALDERSON WILLIAM H &						
GRANTEE: COLETTI PHILIP L &						
0648/0150	2/05/1992	WD	U	I		325,000
GRANTOR: ANDERSON W HARVEY						
GRANTEE: ALDERSON WM & B J						

BUILDING NOTES

BUILDING DIMENSIONS

PTO=[YR=2020] W68 S11 FGR=[YR=2020] S29 E2 FOP=[YR=2020] S6 E23 S1 E18 N1 E23 N6 FGR=[YR=2020] E2 N35 W14 S6 W13 SFB=[YR=2020] W26 S24 FST=[YR=2020] S5 E7 N5 W7$ E7 S5 E8 N2 E8 S2 E3 N29$ S29 E25$ W28 N2 W8 S2 W28 $ E13 N29 W15$ E54 N6 E14 N5$ PTR=S60 BAL=[YR=2020] W6 FOP=[YR=2020] W12 STR=[YR=2020] N5 W14 BAL=[YR=2020] N2 W42 S7 E42 N5$ S5 E14$ W56 S11 FUS=[YR=2020] S29 E2 FOP=[YR=2020] S6 E23 S1 E6 UOP=[YR=2020] S4 W6 S4 E18 N4 W6 N4 W6$ E12 N1 E23 N6 W28 N2 W8 STR=[YR=2020] N10 W11 S12 E11 N2$ S2 W28$ E17 N12 E11 S10 E8 S2 E30 N35 W14 S6 W13 U4 L4 W12 D4 L4 W21$ E21 U4 R4 E12 D4 R4 E13 N6 E14 N5$ S12 E6 N12 $ N60$ PTR=E15 FOP=[YR=2020] E68 S5 FUS=[YR=2020] S35 W38 N10 W11 S3 W5 S7

EXTRA FEATURES

LN	OB/XF CODE	DESCRIPTION	BLD	CAP	L	W	UNITS	UT	Adj R	ADJ UNIT PRICE	ORIG COND	YEAR ON	YEAR ACTUAL	Q	% COND	OB/XF MKT VALUE	NOTES
3	0416	DUNEWALKS	0	100	0	0	748.00	SF	30.00	30.00	100	2020	2020	3	82	18,401	

LAND DESCRIPTION

TOTAL OB/XF 18,401

LN	USE CODE	CLS	LAND USE DESCRIPTION	CAP	RD	LOC ZONE	FRONT	DEPTH	TOT LND UTS	UNIT TYPE	DT	DPTH FACT	% COND	TOT ADJ	UNIT PRICE	ADJ UNIT PRICE	LAND VALUE	OTHER ADJUSTMENTS AND NOTES	YEAR	DENSITY	DECL	FRZ	YR	CONSRV
1	000120	C	RES OCEAN	100		R-1	105.00	193.00	105.00	FF		1.00	1.00	1.25	21,000.00	26,250.00	2,756,250							

REVIEW DATE 01/01/2023 BY CD Total Acres: 0.00 Total Land Value: 2,756,250 Market: 0 Agricultural: 0 Common: 2,756,250 PRINTED 07/09/2026 BY SYS