BLOCK 7A LOT 14 (EX S1/2)
IN OR 909/1204 & OR 2167/1252
INTERLACHEN-BY-THE-SEA-REPLAT

KING GENE K JR & SUE M
1719 N FLETCHER AVE
FERNANDINA BEACH, FL 32034

2026

00-00-31-1401-007A-0141

BUILDING CHARACTERISTICS

ELEMENT	CD	CONSTRUCTION
Exterior Wall	10	ABOVE AVG 60
Exterior Wall	16	WD FR STUC 40
Roof Structur	03	GABLE/HIP 100
Roof Cover	03	COMP SHNGL 100
Interior Wall	05	DRYWALL 100
Interior Floo	11	CLAY TILE 60
Interior Floo	14	CARPET 40
Air Condition	03	CENTRAL 100
Heating Type	04	AIR DUCTED 100
Bedrooms		3 100
Bathrooms		2 100
Frame	07	SPECIAL 100
Stories	3.	3. 100
Units		0 100
BUD8 Adjustme	02	DIST FB 100
Occupancy	00	NONE 100
Quality	03	Quality Level 03
DOR CODE	0100	SINGLE FAMILY
MAP NUM		MKT AREA 01
NEIGHBORHOOD/LOC	1056.00	

AREA TYPE	TOTAL GROSS AREA	PCT OF BASE	YEAR	TOT ADJ AREA	SUBAREA MARKET VALUE
BAL	117	15	1993	18	2,463
BAL	324	15	1993	49	6,707
BAL	96	15	1995	14	1,917
BAS	1,008	100	1993	1,008	137,976
FEP	128	80	2004	102	13,962
FUS	504	100	1993	504	68,988
STR	52	10	1995	5	684
UGR	1,008	45	1993	454	62,144
UOP	324	20	1993	65	8,898
UOP	350	20	1993	70	9,582
TOTALS	3,911			2,289	313,321

MARKET ADJUSTMENTS

TYPE	MDL	EFF. AREA	TOT ADJ PTS	EFF. BASE RATE	REPL. COST NEW	AYB	EYB	ECON	FNCT		NORM	% COND
0900	01	2,289	115.4440	160.47	367,316	1981	1995	0	0	0	14.70	85.30

1 SNGL FAM 100% - 2021 Heated Area: 1512 HX Base Yr 2021

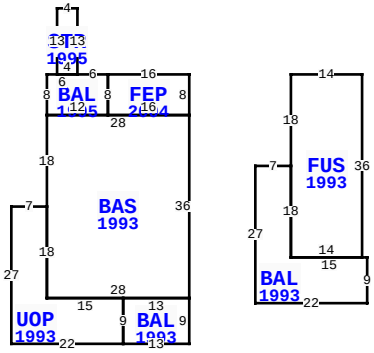

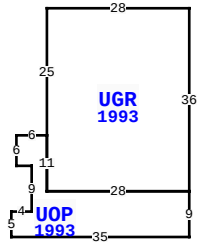

1719 N FLETCHER AVE, FERNANDINA BEACH

BLD DATE		LGL DATE	
XF DATE		LAND DATE	
INC DATE		AG DATE	

NASSAU COUNTY PROPERTY

PAGE 1 of 1 2

VALUATION SUMMARY

VALUATION BY		STANDARD
Tax Group: 2	Tax Dist:	
BUILDING MARKET VALUE		313,321
TOTAL MARKET OB/XF VALUE		44,778
TOTAL LAND VALUE - MARKET		450,000
TOTAL MARKET VALUE		808,099
SOH/AGL Deduction		260,200
ASSESSED VALUE		547,899
TOTAL EXEMPTION VALUE	HX HB	51,411
BASE TAXABLE VALUE		496,488
TOTAL JUST VALUE		808,099
NCON VALUE		0
INCOME VALUE		
PREVIOUS YEAR MKT VALUE		771,383

PERMIT NUM	DESCRIPTION	AMT	ISSUED
20200162	REMODEL	120,000	04/22/2020
20102041	REMODEL	12,000	11/30/2010
20100844	H/AC	3,200	05/21/2010
20034314	CHNGE SRVC	1,000	12/16/2003
20001987	REPAIR/RRF	2,400	01/19/2000
4128	REPAIR/RRF	9,000	01/16/1987

SALES DATA

OFF RECORD Number	DATE	TYPE INST	Q U	V I	RSN CD	SALE PRICE
2167/1252	12/28/2017	WD	U	I	16	200,000
GRANTOR: GERHARDT KATHRYN M						
GRANTEE: KING GENE K JR						
0909/1204	11/30/1999	WD	Q	I		200,000
GRANTOR: MCBREARTY JOHN F & KA						
GRANTEE: KING GENE K JR & SU						

BUILDING NOTES

BUILDING DIMENSIONS

FEP=[YR=2004] W16 BAL=[YR=1995] W6 STR=[YR=1995] N13W4S13E4$ W6S8 BAS=[YR=1993] S18 UOP=[YR=1993] W7S27E22 BAL=[YR=1993] E13N9W13S9$ N9W15N18$ S18E28N36W28$ E12N8$ S8E16N8$ PTR=E20 FUS=[YR=1993] S18 BAL=[YR=1993] W7 S27 E22N9W15N18$ S18E14N36W14$ W20$ PTR=S70 UGR=[YR=1993] W28S25 UOP=[YR=1993] W6S6E3S9 W4S5E35N9W28 N11$ S11E28N36$ N70$.

EXTRA FEATURES

LN	OB/XF CODE	DESCRIPTION	BLD	CAP	L	W	UNITS	UT	Adj R	ADJ UNIT PRICE	ORIG COND	YEAR ON	YEAR ACTUAL	Q	% COND	OB/XF MKT VALUE	NOTES
2	0500	FP-PRE FAB	0	100	0	0	1.00	UT	3,500.00	3,500.00	100	1981	1981	3	44	1,540	
4	0860	POOL/SPA	0	100	0	0	1.00	UT	50,000.00	50,000.00	100	1995	1995	04	85	42,500	
6	0350	CARPORT WD	0	100	0	0	120.00	SF	9.36	9.36	100	1995	1995	3	20	225	
7	0820	WOOD WALK	0	100	13	8	104.00	SF	11.75	11.75	100	1995	1995	3	40	489	
8	1242	WD DECK A	0	100	3	4	12.00	SF	10.00	10.00	100	1990	1990	3	20	24	

LAND DESCRIPTION

TOTAL OB/XF 44,778

LN	USE CODE	CLS	LAND USE DESCRIPTION	CAP	RD	LOC ZONE	FRONT	DEPTH	TOT LND UTS	UNIT TYPE	DT	DPTH FACT	% COND	TOT ADJ	UNIT PRICE	ADJ UNIT PRICE	LAND VALUE	OTHER ADJUSTMENTS AND NOTES	YEAR	DENSITY	DECL	FRZ	YR	CONSRV
1	000100	C	RES	100	0006	R-1	50.00	150.00	50.00	FF		1.00	1.00	1.00	9,000.00	9,000.00	450,000							

REVIEW DATE 01/01/2023 BY CD Total Acres: 0.00 Total Land Value: 450,000 Market: 0 Agricultural: 0 Common: 450,000 PRINTED 07/09/2026 BY SYS