LOT 2
IN OR 1973/777
HIGHLAND OAKS PB 5/131

VARNADOE AARON M & MELINDA H
803 AMELIA CIRCLE
FERNANDINA BEACH, FL 32034

2026

00-00-31-1385-0002-0000

NASSAU COUNTY PROPERTY

BUILDING CHARACTERISTICS

ELEMENT	CD	CONSTRUCTION
Exterior Wall	05	AVERAGE 100
Roof Structur	03	GABLE/HIP 100
Roof Cover	12	MODULAR MT 100
Interior Wall	05	DRYWALL 100
Interior Floo	12	HARDWOOD 60
Interior Floo	14	CARPET 40
Air Condition	03	CENTRAL 100
Heating Type	04	AIR DUCTED 100
Bedrooms		2 100
Bathrooms		2 100
Frame	02	WOOD FRAME 100
Stories	1.	1. 100
Units		0 100
BUD8 Adjustme	02	DIST FB 100
Occupancy	00	NONE 100
Quality	03	Quality Level 03

DOR CODE	0100	SINGLE FAMILY	
MAP NUM		MKT AREA	01
NEIGHBORHOOD/LOC	1007.00		

AREA TYPE	TOTAL GROSS AREA	PCT OF BASE	YEAR	TOT ADJ AREA	SUBAREA MARKET VALUE
BAS	208	100	1993	208	20,666
BAS	1,255	100	1993	1,255	124,695
DCK	57	10	1993	6	596
DCK	128	10	1993	13	1,292
FGR	506	55	1993	278	27,622
FOP	174	30	1993	52	5,167
STR	21	10	1993	2	199
TOTALS	2,349			1,814	180,237

MARKET ADJUSTMENTS

TYPE	MDL	EFF. AREA	TOT ADJ PTS	EFF. BASE RATE	REPL. COST NEW	AYB	EYB	ECON	FNCT		NORM	% COND
0100	01	1,814	111.0000	116.55	211,422	1988	1995	0	0	0	14.75	85.25

1 SINGLE FAM 100% - 2016 Heated Area: 1463 HX Base Yr 2016

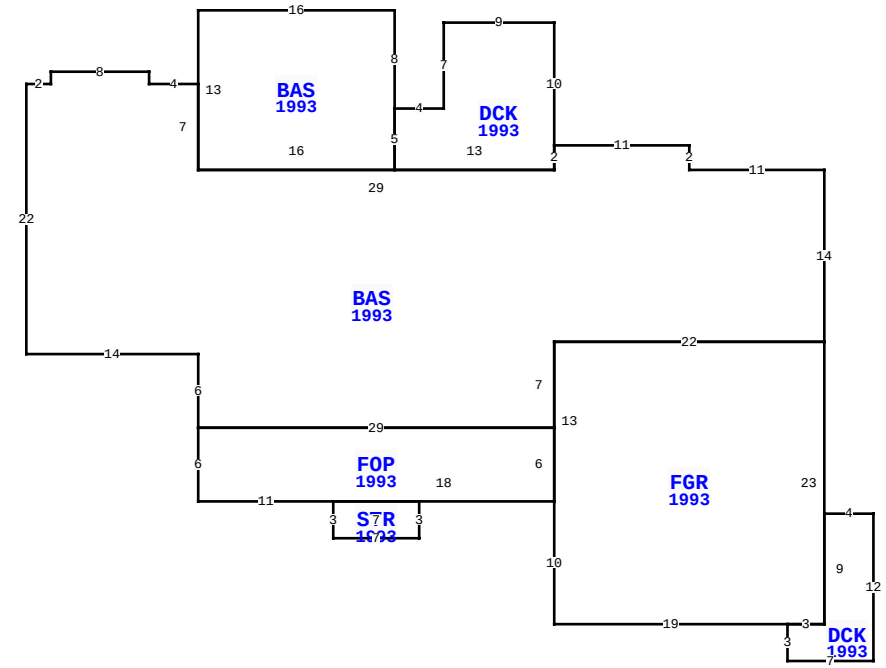

803 AMELIA CIR, FERNANDINA BEACH

BLD DATE	02/06/2014	KK	LGL DATE		
XF DATE			LAND DATE	04/09/2025	MLU
INC DATE			AG DATE		

NASSAU COUNTY PROPERTY — VALUATION SUMMARY

VALUATION BY		STANDARD
Tax Group: 2	Tax Dist:	
BUILDING MARKET VALUE		180,237
TOTAL MARKET OB/XF VALUE		0
TOTAL LAND VALUE - MARKET		300,000
TOTAL MARKET VALUE		480,237
SOH/AGL Deduction		272,381
ASSESSED VALUE		207,856
TOTAL EXEMPTION VALUE	HX HB	51,411
BASE TAXABLE VALUE		156,445
TOTAL JUST VALUE		480,237
NCON VALUE		0
INCOME VALUE		
PREVIOUS YEAR MKT VALUE		476,333

PERMIT NUM	DESCRIPTION	AMT	ISSUED
20091392	REMODEL	500	10/09/2009
20020990	REPAIR/RRF	1,000	06/11/2002
4944	NEW CONSTR	62,240	07/26/1988

SALES DATA

OFF RECORD Number	DATE	TYPE INST	Q U	V I	RSN CD	SALE PRICE
1973/0777	4/06/2015	WD	Q	I	02	230,000
GRANTOR: MALENKE JAMES & JANE						
GRANTEE: VARNADOE AARON M &						
1872/0161	7/17/2013	WD	U	I	11	100
GRANTOR: GENGLER JOHN & VIRGIN						
GRANTEE: MALENKE JAMES & JAN						

BUILDING NOTES

BUILDING DIMENSIONS

BAS=[YR=1993] W11 N2 W11DCK=[YR=1993] N10 W9S7W4
BAS=[YR=1993] N8W16S13E16N5$ S5E13N2$ S2 W29 N7 W4 N1 W8 S1
W2 S22 E14 S6 FOP=[YR=1993] S6E11 STR=[YR=1993] S3E7N3W7$E18
FGR=[YR=1993] S10E19 DCK=[YR=1993] S3E7N12W4S9W3$ E3N23 W22
S13$N6 W29 $ E29 N7 E22 N14 $.

EXTRA FEATURES

LN	OB/XF CODE	DESCRIPTION	BLD	CAP	L	W	UNITS	UT	Adj R	ADJ UNIT PRICE	ORIG COND	YEAR ON	YEAR ACTUAL	Q	% COND	OB/XF MKT VALUE	NOTES

LAND DESCRIPTION

TOTAL OB/XF 0

LN	USE CODE	CLS	LAND USE DESCRIPTION	CAP	RD	LOC ZONE	FRONT	DEPTH	TOT LND UTS	UNIT TYPE	DT	DPTH FACT	% COND	TOT ADJ	UNIT PRICE	ADJ UNIT PRICE	LAND VALUE	OTHER ADJUSTMENTS AND NOTES	YEAR	DENSITY	DECL	FRZ	YR	CONSRV
1	000100	C	RES	100	0006	R-1	102.00	133.00	1.00	LT		1.00	1.00	1.00	300,000.00	300,000.00	300,000							

REVIEW DATE 01/01/2023 BY CD Total Acres: 0.00 Total Land Value: 300,000 Market: 0 Agricultural: 0 Common: 300,000 PRINTED 07/09/2026 BY SYS