BLOCK 1 LOTS 10 & 11
HIGHLAND HEIGHTS SUB 1 PB 3/43

MAHONY KEVIN G REVOCABLE TRUST/MAHONY KEVIN G TRUS
818 AMELIA DRIVE
FERNANDINA BEACH, FL 32034

**2026**

**00-00-31-1380-0001-0100**

## NASSAU COUNTY PROPERTY



## BUILDING CHARACTERISTICS

| ELEMENT | CD | CONSTRUCTION |
|---|---|---|
| Exterior Wall | 20 | FACE BRICK 70 |
| Exterior Wall | 10 | ABOVE AVG 30 |
| Roof Structur | 03 | GABLE/HIP 100 |
| Roof Cover | 13 | STAND SEAM 100 |
| Interior Wall | 05 | DRYWALL 80 |
| Interior Wall | 06 | CUST PANEL 20 |
| Interior Floo | 14 | CARPET 100 |
| Air Condition | 03 | CENTRAL 100 |
| Heating Type | 04 | AIR DUCTED 100 |
| Bedrooms | | 5 100 |
| Bathrooms | | 4 100 |
| Frame | 02 | WOOD FRAME 100 |
| Stories | 2. | 2. 100 |
| Units | | 0 100 |
| BUD8 Adjustme | 02 | DIST FB 100 |
| Quality | 06 | Quality Level 06 |
| DOR CODE | 0100 | SINGLE FAMILY |
| MAP NUM | | MKT AREA 01 |
| NEIGHBORHOOD/LOC | 1007.00 | |

| AREA TYPE | TOTAL GROSS AREA | PCT OF BASE | YEAR | TOT ADJ AREA | SUBAREA MARKET VALUE |
|---|---|---|---|---|---|
| BAS | 1,519 | 100 | 1993 | 1,519 | 383,639 |
| BAS | 506 | 100 | 2024 | 506 | 127,795 |
| FCP | 340 | 25 | 2024 | 85 | 21,467 |
| FOP | 40 | 30 | 1993 | 12 | 3,031 |
| FOP | 170 | 30 | 1993 | 51 | 12,880 |
| FOP | 32 | 30 | 2012 | 10 | 2,526 |
| FOP | 168 | 30 | 2024 | 50 | 12,628 |
| FUS | 1,053 | 100 | 1993 | 1,053 | 265,945 |
| UOP | 24 | 20 | 2012 | 5 | 1,263 |
| UOP | 40 | 20 | 2024 | 8 | 2,021 |
| TOTALS | 4,062 | | | 3,375 | 852,390 |

## MARKET ADJUSTMENTS

| TYPE | MDL | EFF. AREA | TOT ADJ PTS | EFF. BASE RATE | REPL. COST NEW | AYB | EYB | ECON | FNCT | | NORM | % COND |
|---|---|---|---|---|---|---|---|---|---|---|---|---|
| 0500 | 11 | 3,375 | 157.2206 | 260.99 | 880,841 | 1974 | 2020 | 0 | 0 | 0 | 3.23 | 96.77 |

1 SFR CUST 100% - 2022 Heated Area: 3078 HX Base Yr 2022

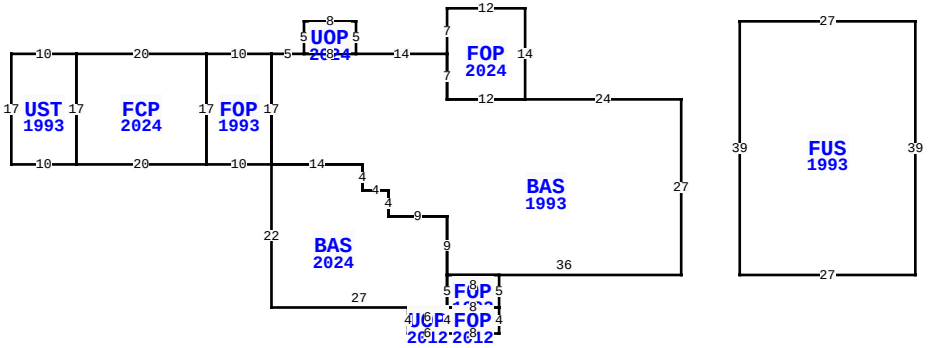


** This building has 11 Sub-Areas

818 AMELIA DR, FERNANDINA BEACH

| | | | |
|---|---|---|---|
| BLD DATE | | LGL DATE | |
| XF DATE | | LAND DATE | 05/06/2026 MLU |
| INC DATE | | AG DATE | |

## VALUATION SUMMARY

| | | |
|---|---|---|
| VALUATION BY | | STANDARD |
| Tax Group: 2 | Tax Dist: | |
| BUILDING MARKET VALUE | | 852,390 |
| TOTAL MARKET OB/XF VALUE | | 48,551 |
| TOTAL LAND VALUE - MARKET | | 382,500 |
| TOTAL MARKET VALUE | | 1,283,441 |
| SOH/AGL Deduction | | 241,631 |
| ASSESSED VALUE | | 1,041,810 |
| TOTAL EXEMPTION VALUE | HX HB | 51,411 |
| BASE TAXABLE VALUE | | 990,399 |
| TOTAL JUST VALUE | | 1,283,441 |
| NCON VALUE | | 0 |
| INCOME VALUE | | |
| PREVIOUS YEAR MKT VALUE | | 1,191,028 |

| PERMIT NUM | DESCRIPTION | AMT | ISSUED |
|---|---|---|---|
| 20230060 | 855 & 600 | 53,446 | 02/14/2023 |
| 20200038 | REMODEL | 50,000 | 06/02/2020 |
| 20190223 | DEMOSCRNRM | 0 | 07/26/2019 |
| 5968 | REPAIR/RRF | 5,342 | 05/08/1990 |

## SALES DATA

| OFF RECORD Number | DATE | TYPE INST | Q / U | V / I | RSN CD | SALE PRICE |
|---|---|---|---|---|---|---|
| 2780/1361 | 4/09/2025 | WD | U | I | 11 | 100 |
| GRANTOR: MAHONY KEVIN G | | | | | | |
| GRANTEE: MAHONY KEVIN G REVO | | | | | | |
| 2480/0264 | 7/16/2021 | WD | Q | I | 01 | 964,900 |
| GRANTOR: CARRINO ROBERT A & BR | | | | | | |
| GRANTEE: MAHONY KEVIN G & JO | | | | | | |

## BUILDING NOTES

## EXTRA FEATURES

| LN | OB/XF CODE | DESCRIPTION | BLD | CAP | L | W | UNITS | UT | Adj R | ADJ UNIT PRICE | ORIG COND | YEAR ON | YEAR ACTUAL | Q | % COND | OB/XF MKT VALUE | NOTES |
|---|---|---|---|---|---|---|---|---|---|---|---|---|---|---|---|---|---|
| 2 | 0500 | FP-PRE FAB | 0 | 100 | 0 | 0 | 1.00 | UT | 3,500.00 | 3,500.00 | 100 | 1974 | 1974 | 3 | 31.6 | 1,106 | |
| 3 | 0860 | POOL/SPA | 0 | 100 | 0 | 0 | 1.00 | UT | 50,000.00 | 50,000.00 | 100 | 1974 | 1974 | 04 | 85 | 42,500 | |
| 4 | 1242 | WD DECK A | 0 | 100 | 0 | 0 | 72.00 | SF | 5.00 | 5.00 | 100 | 2020 | 2020 | 3 | 82 | 295 | |
| 6 | 0600 | SUMMER KIT | 0 | 100 | 0 | 0 | 1.00 | UT | 5,000.00 | 5,000.00 | 100 | 2024 | 2023 | | 93 | 4,650 | |

## BUILDING DIMENSIONS

BAS=[YR=1993;ORIG=0,0] W24 W12 N7 W14 W8 W5 S17 E14 S4 E4 S4 E9 S9 E36 N27 $
FUS=[YR=1993;ORIG=36,27] N39 W27 S39 E27 $
FOP=[YR=1993;ORIG=-63,-7] W10 S17 E10 N17 $
UST=[YR=1993;ORIG=-93,-7] W10 S17 E10 N17 $
FOP=[YR=1993;ORIG=-28,32] N5 W8 S5 E8 $
FOP=[YR=2012;ORIG=-36,36] E8 N4 W8 S4 $
UOP=[YR=2012;ORIG=-42,32] S4 E6 N4 W6 $
FCP=[YR=2024;ORIG=-93,-7] E20 S17 W20 N17 $
FOP=[YR=2024;ORIG=-36,-14] E12 S14 W12 N7 N7 $
UOP=[YR=2024;ORIG=-58,-12] E8 S5 W8 N5 $
BAS=[YR=2024;ORIG=-63,10] E14 D4L0 U0R4 S4 E9 S9 S5 W27 N22 $

## LAND DESCRIPTION

TOTAL OB/XF 48,551

| LN | USE CODE | CLS | LAND USE DESCRIPTION | CAP | RD | LOC ZONE | FRONT | DEPTH | TOT LND UTS | UNIT TYPE | DT | DPTH FACT | % COND | TOT ADJ | UNIT PRICE | ADJ UNIT PRICE | LAND VALUE | OTHER ADJUSTMENTS AND NOTES | YEAR | DENSITY | DECL | FRZ | YR | CONSRV |
|---|---|---|---|---|---|---|---|---|---|---|---|---|---|---|---|---|---|---|---|---|---|---|---|---|
| 1 | 000100 | C | RES | 100 | 0006 | R-1 | 81.00 | 180.00 | 1.00 | LT | | 1.00 | 1.00 | 1.00 | 255,000.00 | 255,000.00 | 255,000 | | | | | | | |
| 2 | 000100 | C | RES | 100 | 0006 | R-1 | 66.00 | 195.00 | 1.00 | LT | | 1.00 | 1.00 | 0.50 | 255,000.00 | 127,500.00 | 127,500 | | | | | | | |

REVIEW DATE 12/12/2023 BY TWX Total Acres: 0.00 Total Land Value: 382,500 Market: 0 Agricultural: 0 Common: 382,500 PRINTED 07/09/2026 BY SYS