LOT 14 (EX N 3.13 FT)
IN OR 2143/920
HAMBYS SUB PB 2/32

PARKS TODD STANLEY
2117 S FLETCHER AVENUE
FERNANDINA BEACH, FL 32034

2026

00-00-31-1360-0014-0000

BUILDING CHARACTERISTICS

ELEMENT	CD	CONSTRUCTION
Exterior Wall	12	CEDAR 100
Roof Structur	03	GABLE/HIP 100
Roof Cover	11	SLATE 100
Interior Wall	05	DRYWALL 100
Interior Floo	11	CLAY TILE 70
Interior Floo	14	CARPET 30
Air Condition	03	CENTRAL 100
Heating Type	04	AIR DUCTED 100
Bedrooms		3 100
Bathrooms		4 100
Frame	02	WOOD FRAME 100
Stories	2.	2. 100
Units		0 100
BUD8 Adjustme	02	DIST FB 100
Occupancy	00	NONE 100
Quality	03	Quality Level 03
DOR CODE	0100	SINGLE FAMILY
MAP NUM		MKT AREA 01
NEIGHBORHOOD/LOC	1058.00	

AREA TYPE	TOTAL GROSS AREA	PCT OF BASE	YEAR	TOT ADJ AREA	SUBAREA MARKET VALUE
BAS	1,140	100	1993	1,140	203,116
FCP	156	25	1993	39	6,948
FGR	286	55	1993	157	27,973
FGR	312	55	1993	172	30,646
FOP	40	30	1993	12	2,138
FOP	65	30	1993	20	3,563
FOP	72	30	1993	22	3,919
FUS	712	100	1993	712	126,858
SFB	371	80	1993	297	52,917
UOP	72	20	1993	14	2,495
TOTALS	3,556			2,651	472,335

MARKET ADJUSTMENTS

TYPE	MDL	EFF. AREA	TOT ADJ PTS	EFF. BASE RATE	REPL. COST NEW	AYB	EYB	ECON	FNCT		NORM	% COND
0500	01	2,651	127.7760	212.11	562,304	1993	1993	0	0	0	16.00	84.00

1 SFR CUST 100% - 2024 Heated Area: 2149 HX Base Yr 2024

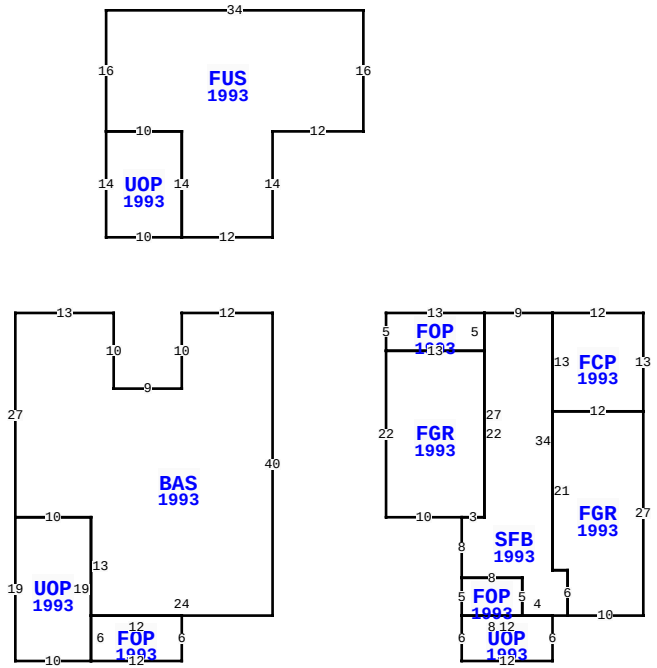

** This building has 12 Sub-Areas

2117 S FLETCHER AVE, FERNANDINA BEACH

BLD DATE		LGL DATE	
XF DATE		LAND DATE	04/27/2026 MLU
INC DATE		AG DATE	

NASSAU COUNTY PROPERTY

PAGE 1 of 1 2

VALUATION SUMMARY

VALUATION BY		STANDARD
Tax Group: 2	Tax Dist:	
BUILDING MARKET VALUE		472,335
TOTAL MARKET OB/XF VALUE		0
TOTAL LAND VALUE - MARKET		379,525
TOTAL MARKET VALUE		851,860
SOH/AGL Deduction		62,571
ASSESSED VALUE		789,289
TOTAL EXEMPTION VALUE	HX HB	51,411
BASE TAXABLE VALUE		737,878
TOTAL JUST VALUE		851,860
NCON VALUE		0
INCOME VALUE		
PREVIOUS YEAR MKT VALUE		789,506

PERMIT NUM	DESCRIPTION	AMT	ISSUED
20120581	H/AC	4,000	04/09/2012
20120462	REPL SLID DOOR	1,400	03/20/2012
B032914	REMODEL	10,000	04/15/2003
7857	DEMOLITION	3,000	08/16/1993
7870	NEW CONSTR	75,300	08/03/1993

SALES DATA

OFF RECORD Number	DATE	TYPE INST	Q / U	V / I	RSN CD	SALE PRICE
2143/0920	8/29/2017	WD	Q	I	01	600,000
GRANTOR: O'KEEFE JOHN W						
GRANTEE: PARKS TODD STANLEY						
1625/0028	9/19/2008	WD	U	I	27	390,000
GRANTOR: PRUDENTIAL RELOCATION						
GRANTEE: O'KEEFE JOHN W						

BUILDING NOTES

BUILDING DIMENSIONS

BAS=[YR=1993] W12 S10 W9 N10 W13 S27 UOP=[YR=1993] S19 E10 FOP=[YR=1993] E12 N6 W12 S6$ N19 W10$ E10 S13 E24 N40$ PTR=E15 FOP=[YR=1993] E13 SFB=[YR=1993] E9 FCP=[YR=1993] E12 S13 FGR=[YR=1993] S27 W10 N6 W2 N21 E12$ W12N13$ S34 E2 S6 W2 UOP=[YR=1993] S6 W12 N6 FOP=[YR=1993] N5 E8 S5 W8$ E12$ W4 N5W8 N8 FGR=[YR=1993] W10 N22 E13 S22 W3$ E3 N27$ S5 W13 N5$ W15$ PTR= N10 FUS=[YR=1993] N14 E12 N16 W34 S16 UOP=[YR=1993] S14 E10 N14 W10$ E10 S14 E12$ S10$.

EXTRA FEATURES

LN	OB/XF CODE	DESCRIPTION	BLD	CAP	L	W	UNITS	UT	Adj R	ADJ UNIT PRICE	ORIG COND	YEAR ON	YEAR ACTUAL	Q	% COND	OB/XF MKT VALUE	NOTES

LAND DESCRIPTION

TOTAL OB/XF 0

LN	USE CODE	CLS	LAND USE DESCRIPTION	CAP	RD	LOC ZONE	FRONT	DEPTH	TOT LND UTS	UNIT TYPE	DT	DPTH FACT	% COND	TOT ADJ	UNIT PRICE	ADJ UNIT PRICE	LAND VALUE	OTHER ADJUSTMENTS AND NOTES	YEAR	DENSITY	DECL	FRZ	YR	CONSRV
1	000100	C	RES	100		R-2	47.00	110.00	47.00	FF		1.00	1.00	0.95	8,500.00	8,075.00	379,525							

REVIEW DATE 01/01/2023 BY CD Total Acres: 0.00 Total Land Value: 379,525 Market: 0 Agricultural: 0 Common: 379,525 PRINTED 07/09/2026 BY SYS