LOT 185
IN OR 2040/1304 & OR 2040/1310
FOREST HILLS 4 PB 4/61

VANPUYMBROUCK ROBERT L & DONNA
2002 SUNRISE DR
FERNANDINA BEACH, FL 32034

2026

00-00-31-128D-0185-0000

NASSAU COUNTY PROPERTY

BUILDING CHARACTERISTICS

ELEMENT	CD	CONSTRUCTION
Exterior Wall	16	WD FR STUC 100
Roof Structur	08	IRREGULAR 100
Roof Cover	03	COMP SHNGL 100
Interior Wall	05	DRYWALL 100
Interior Floo	12	HARDWOOD 70
Interior Floo	14	CARPET 30
Air Condition	03	CENTRAL 100
Heating Type	04	AIR DUCTED 100
Bedrooms		4 100
Bathrooms		4.5 100
Frame	02	WOOD FRAME 100
Stories	2.	2. 100
Units		0 100
Quality	06	Quality Level 06

DOR CODE	0100	SINGLE FAMILY	
MAP NUM		MKT AREA	01
NEIGHBORHOOD/LOC	1007.00		

AREA TYPE	TOTAL GROSS AREA	PCT OF BASE	YEAR	TOT ADJ AREA	SUBAREA MARKET VALUE
BAS	3,041	100	1993	3,041	736,788
BAS	81	100	2017	81	19,625
BAS	5	100	2024	5	1,212
BAS	164	100	2024	164	39,734
FGR	792	55	1994	436	105,636
FGR	325	55	2024	179	43,369
FOP	62	30	1994	19	4,603
FSP	1,080	40	2017	432	104,667
FUS	1,140	100	1994	1,140	276,204
UOP	36	20	2017	7	1,696
TOTALS	6,726			5,504	1,333,536

MARKET ADJUSTMENTS

TYPE	MDL	EFF. AREA	TOT ADJ PTS	EFF. BASE RATE	REPL. COST NEW	AYB	EYB	ECON	FNCT		NORM	% COND
0500	11	5,504	152.0332	252.38	1,389,100	1994	2017	0	0	0	4.00	96.00

1 SFR CUST 100% - 2017 Heated Area: 4431 HX Base Yr 2017

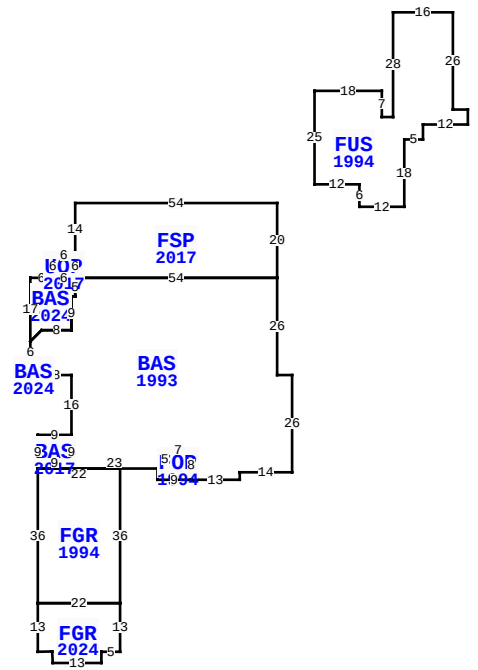

2002 SUNRISE DR, FERNANDINA BEACH

BLD DATE		LGL DATE	
XF DATE		LAND DATE	05/06/2026 MLU
INC DATE		AG DATE	

VALUATION SUMMARY

VALUATION BY		STANDARD
Tax Group: 2	Tax Dist:	
BUILDING MARKET VALUE		1,333,536
TOTAL MARKET OB/XF VALUE		138,859
TOTAL LAND VALUE - MARKET		675,000
TOTAL MARKET VALUE		2,147,395
SOH/AGL Deduction		756,489
ASSESSED VALUE		1,390,906
TOTAL EXEMPTION VALUE	HX HB	51,411
BASE TAXABLE VALUE		1,339,495
TOTAL JUST VALUE		2,147,395
NCON VALUE		0
INCOME VALUE		
PREVIOUS YEAR MKT VALUE		2,201,510

PERMIT NUM	DESCRIPTION	AMT	ISSUED
20211319	GARAGE	0	05/21/2021
20161484	CO ISSUED	0	04/27/2017
20163263	ALUMFNC	0	11/30/2016
20161484	ADDITION	200,680	05/26/2016
20101424	REPAIR/RRF	1,200	08/25/2010
20100471	REMODEL	15,400	03/19/2010

SALES DATA

OFF RECORD Number	DATE	TYPE INST	Q / U	V / I	RSN CD	SALE PRICE
2040/1310	4/15/2016	WD	U	I	11	100
GRANTOR: KEFFER RICHARD W JR R						
GRANTEE: VANPUYMBROUCK ROBER						
2040/1304	4/15/2016	WD	U	I	19	1,100,000
GRANTOR: KEFFER RICHARD W III						
GRANTEE: VANPUYMBROUCK ROBER						

BUILDING NOTES

BUILDING DIMENSIONS

BAS=[YR=1993;ORIG=-54,50] S5 W1 S9 W8 D3L3 S6 D3R3 E8 S16 S9 E23 E2 N5 E7 S8 E13 N2 E14 N26 W4 N26 W54 $
FUS=[YR=1994;ORIG=10,0] E18 S7 E3 N28 E16 S26 E4 S4 W12 S4 W5 S18 W12 N6 W12 N25 $
FSP=[YR=2017;ORIG=-54,30] S14 S6 E54 N20 W54 $
FGR=[YR=1994;ORIG=-64,101] S36 E22 N36 W22 $
FGR=[YR=2024;ORIG=-64,137] E22 S13 W5 S3 W13 U3.1L0.2 D0.1L3.10 N13 $
BAS=[YR=2024;ORIG=-66,50] E6 E6 S5 W1 S9 W8 D3L3 N17 $
BAS=[YR=2017;ORIG=-55,92] W9 S9 E9 N9 $
FOP=[YR=1994;ORIG=-32,101] S3 E9 N8 W7 S5 W2 $
UOP=[YR=2017;ORIG=-54,44] W6 S6 E6 N6 $

EXTRA FEATURES

LN	OB/XF CODE	DESCRIPTION	BLD	CAP	L	W	UNITS	UT	Adj R	ADJ UNIT PRICE	ORIG COND	YEAR ON	YEAR ACTUAL	Q	% COND	OB/XF MKT VALUE	NOTES
2	0500	FP-PRE FAB	0	100	0	0	2.00	UT	3,500.00	3,500.00	100	1994	1994	3	72	5,040	
3	0940	SHEDS/PORT	0	100	8	12	96.00	SF	30.00	30.00	100	1994	1994	3	20	576	
4	0300	BOAT DCK W	0	100	41	6	246.00	SF	40.00	40.00	100	1989	1989	3	81	7,970	
6	0920	CWALL-WD/M	0	100	0	0	280.00	LF	390.00	390.00	100	2003	2003	3	20	21,840	
7	0317	DCK PLNG W	0	100	0	0	2.00	UT	1,000.00	1,000.00	100	1989	1989	3	20	400	
9	1124	CB/STC 4"	0	100	14	4	56.00	SF	6.50	6.50	100	1994	1994	3	64	233	
10	0860	POOL/SPA	0	100	0	0	1.00	UT	50,000.00	50,000.00	100	2017	2017	04	95	47,500	
16	0300	BOAT DCK W	1	100	56	6	336.00	SF	40.00	40.00	100	2023	2018		81	10,886	
17	0300	BOAT DCK W	1	100	0	0	592.00	SF	40.00	40.00	100	2023	2019		84	19,891	
18	0323	BOAT LFT H	1	100	0	0	3.00	UT	2,500.00	2,500.00	100	2023	2019		78	5,850	

TOTAL OB/XF 120,186

LAND DESCRIPTION

LN	USE CODE	CLS	LAND USE DESCRIPTION	CAP	RD	LOC ZONE	FRONT	DEPTH	TOT LND UTS	UNIT TYPE	DT	DPTH FACT	% COND	TOT ADJ	UNIT PRICE	ADJ UNIT PRICE	LAND VALUE	OTHER ADJUSTMENTS AND NOTES	YEAR	DENSITY	DECL	FRZ	YR	CONSRV
1	000131	C	RES CREEK	100	0006	R-1	100.00	350.00	100.00	FF		1.00	1.00	1.00	6,750.00	6,750.00	675,000							

REVIEW DATE 12/12/2023 BY TWX Total Acres: 0.00 Total Land Value: 675,000 Market: 0 Agricultural: 0 Common: 675,000 PRINTED 07/09/2026 BY SYS

LOT 185
IN OR 2040/1304 & OR 2040/1310
FOREST HILLS 4 PB 4/61

VANPUYMBROUCK ROBERT L & DONNA
2002 SUNRISE DR
FERNANDINA BEACH, FL 32034

2026

00-00-31-128D-0185-0000

BUILDING CHARACTERISTICS

ELEMENT	CD	CONSTRUCTION

DOR CODE	0100	SINGLE FAMILY	
MAP NUM		MKT AREA	01
NEIGHBORHOOD/LOC	1007.00		

AREA TYPE	TOTAL GROSS AREA	PCT OF BASE	YEAR	TOT ADJ AREA	SUBAREA MARKET VALUE
TOTALS					

MARKET ADJUSTMENTS

TYPE	MDL	EFF. AREA	TOT ADJ PTS	EFF. BASE RATE	REPL. COST NEW	AYB	EYB	ECON	FNCT		NORM	% COND

NASSAU COUNTY PROPERTY

PAGE 2 of 2 2

VALUATION SUMMARY

VALUATION BY		STANDARD
Tax Group: 2	Tax Dist:	
BUILDING MARKET VALUE		1,333,536
TOTAL MARKET OB/XF VALUE		138,859
TOTAL LAND VALUE - MARKET		675,000
TOTAL MARKET VALUE		2,147,395
SOH/AGL Deduction		756,489
ASSESSED VALUE		1,390,906
TOTAL EXEMPTION VALUE	HX HB	51,411
BASE TAXABLE VALUE		1,339,495
TOTAL JUST VALUE		2,147,395
NCON VALUE		0
INCOME VALUE		
PREVIOUS YEAR MKT VALUE		2,201,510

PERMIT NUM	DESCRIPTION	AMT	ISSUED
20090377	REPAIR/RRF	26,000	03/24/2009
9665B	ADDITION	6,510	03/12/1996
8000	NEW CONSTR	200,000	12/02/1993

SALES DATA

OFF RECORD Number	DATE	TYPE INST	Q U /	V I /	RSN CD	SALE PRICE
2040/1310	4/15/2016	WD	U	I	11	100
GRANTOR: KEFFER RICHARD W JR R						
GRANTEE: VANPUYMBROUCK ROBER						
2040/1304	4/15/2016	WD	U	I	19	1,100,000
GRANTOR: KEFFER RICHARD W III						
GRANTEE: VANPUYMBROUCK ROBER						

BLD DATE		LGL DATE	
XF DATE		LAND DATE	05/06/2026 MLU
INC DATE		AG DATE	

BUILDING NOTES

BUILDING DIMENSIONS

EXTRA FEATURES

LN	OB/XF CODE	DESCRIPTION	BLD	CAP	L	W	UNITS	UT	Adj R	ADJ UNIT PRICE	ORIG COND	YEAR ON	YEAR ACTUAL	Q	% COND	OB/XF MKT VALUE	NOTES
19	0310	AL GANG WY	1	100	0	0	20.00	LF	115.00	115.00	100	2023	2019		78	1,794	
20	0303	FLT DOCK W	1	100	20	10	200.00	SF	26.00	26.00	100	2023	2019		84	4,368	
21	0317	DCK PLNG W	1	100	0	0	2.00	UT	1,000.00	1,000.00	100	2023	2019		78	1,560	
22	0350	CARPORT WD	1	100	36	30	1,080.00	SF	13.00	13.00	100	2023	2019		78	10,951	

LAND DESCRIPTION

TOTAL OB/XF 18,673

LN	USE CODE	CLS	LAND USE DESCRIPTION	CAP	RD	LOC ZONE	FRONT	DEPTH	TOT LND UTS	UNIT TYPE	DT	DPTH FACT	% COND	TOT ADJ	UNIT PRICE	ADJ UNIT PRICE	LAND VALUE	OTHER ADJUSTMENTS AND NOTES	YEAR	DENSITY	DECL	FRZ	YR	CONSRV

REVIEW DATE 12/12/2023 BY TWX Total Acres: 0.00 Total Land Value: 675,000 Market: 0 Agricultural: 0 Common: 675,000 PRINTED 07/09/2026 BY SYS