LOT 4 SECT 2
IN OR 1939/1463
FERREIRA REPLAT OF FDNA BEACH

FOWLER JEFFREY SCOTT & JULIE A
935 NORTH FLETCHER AVE
FERNANDINA BEACH, FL 32034

2026

00-00-31-126B-0004-0000

BUILDING CHARACTERISTICS

ELEMENT	CD	CONSTRUCTION
Exterior Wall	15	CONC BLOCK 70
Exterior Wall	10	ABOVE AVG 30
Roof Structur	03	GABLE/HIP 100
Roof Cover	03	COMP SHNGL 100
Interior Wall	05	DRYWALL 100
Interior Floo	12	HARDWOOD 70
Interior Floo	11	CLAY TILE 30
Air Condition	03	CENTRAL 100
Heating Type	04	AIR DUCTED 100
Bedrooms		5 100
Bathrooms		3 100
Frame	02	WOOD FRAME 100
Stories	1.5	1.5 100
Units		0 100
BUD8 Adjustme	02	DIST FB 100
Occupancy	00	NONE 100
Quality	03	Quality Level 03

DOR CODE 0800 MULTI-FAMILY
MAP NUM | MKT AREA 01
NEIGHBORHOOD/LOC 1041.00

AREA TYPE	TOTAL GROSS AREA	PCT OF BASE	YEAR	TOT ADJ AREA	SUBAREA MARKET VALUE
APT	780	100	1993	780	98,729
FOP	221	30	2021	66	8,354
FSP	96	40	2021	38	4,810
FST	323	55	2021	178	22,531
HXB	780	100	1993	780	98,729
HXB	662	100	2009	662	83,793
HXB	96	100	2021	96	12,151
HXP	192	30	2021	58	7,342
HXU	36	55	1993	20	2,532
HXY	270	15	2009	40	5,063
TOTALS	3,596			2,744	347,323

MARKET ADJUSTMENTS

TYPE	MDL	EFF. AREA	TOT ADJ PTS	EFF. BASE RATE	REPL. COST NEW	AYB	EYB	ECON	FNCT		NORM	% COND
2700	01	2,744	106.9440	148.65	407,896	1951	1995	0	0	0	14.85	85.15

1 DUPLEX 60.36% - 2020 Heated Area: 2318 HX Base Yr 2020

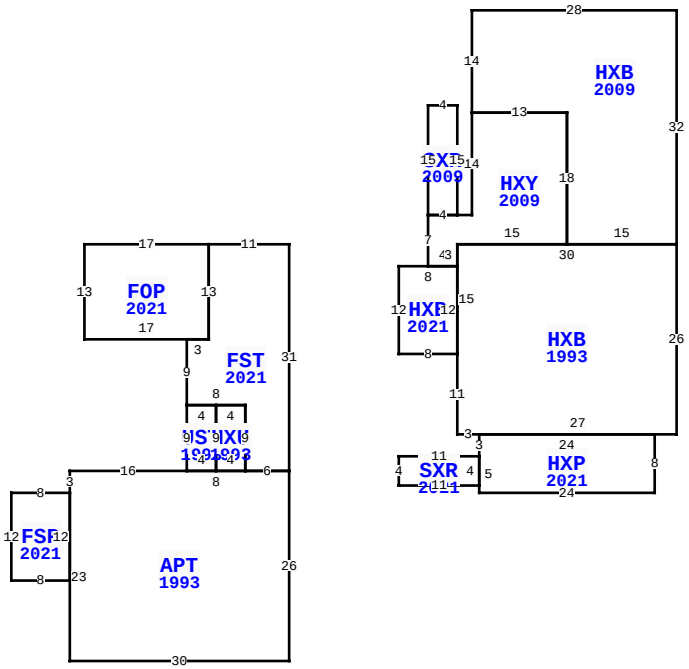

** This building has 13 Sub-Areas

935 N FLETCHER AVE U&D, FERNANDINA BEACH

BLD DATE		LGL DATE	
XF DATE		LAND DATE	03/20/2026 MLU
INC DATE		AG DATE	

NASSAU COUNTY PROPERTY

PAGE 1 of 1 2

VALUATION SUMMARY

VALUATION BY		STANDARD
Tax Group: 2	Tax Dist:	
BUILDING MARKET VALUE		347,323
TOTAL MARKET OB/XF VALUE		0
TOTAL LAND VALUE - MARKET		325,000
TOTAL MARKET VALUE		672,323
SOH/AGL Deduction		151,529
ASSESSED VALUE		520,794
TOTAL EXEMPTION VALUE	HX HB	51,411
BASE TAXABLE VALUE		469,383
TOTAL JUST VALUE		672,323
NCON VALUE		0
INCOME VALUE		
PREVIOUS YEAR MKT VALUE		618,542

PERMIT NUM	DESCRIPTION	AMT	ISSUED
20200163	REMODEL	35,825	05/26/2020
20061950	REMODEL	1,800	08/22/2006
20061858	H/AC	2,700	08/04/2006
20061846	OTHER	2,000	08/03/2006
20061032	ADDITION	67,838	05/15/2006

SALES DATA

OFF RECORD Number	DATE	TYPE INST	Q U	V I	RSN CD	SALE PRICE
1939/1463	9/19/2014	SW	U	I	12	188,000
GRANTOR: FEDERAL HOME LOAN MOR						
GRANTEE: FOWLER JEFFREY SCOT						
1933/0411	7/31/2014	SW	U	I	12	100
GRANTOR: BANK OF AMERICA N A						
GRANTEE: FEDERAL HOME LOAN M						

BUILDING NOTES

BUILDING DIMENSIONS

FST=[YR=2021] W11 FOP=[YR=2021] W17 S13 E17 N13$ S13 W3 S9 UST=[YR=1993] S9 APT=[YR=1993] W16 S3 FSP=[YR=2021] W8 S12 E8 N12$ S23 E30 N26 W6 HXU=[YR=1993] N9 W4 S9 E4$ W8$ E4 N9 W4$ E8 S9 E6 N31$ PTR=E15 S3 HXB=[YR=2021] S12E8 HXB=[YR=1993] S11 E3 HXP=[YR=2021] S3 SXR=[YR=2021] W11 S4 E11 N4$ S5 E24N8W24$ E27N26 HXB=[YR=2009] N32 W28S14 HXY=[YR=2009] S14W2 SXR=[YR=2009] N15W4S15E4$W4S7 E4N3E15N18W13$ E13S18E15$ W30 S15$ N12 W8$ N3W15$.

EXTRA FEATURES

LN	OB/XF CODE	DESCRIPTION	BLD	CAP	L	W	UNITS	UT	Adj R	ADJ UNIT PRICE	ORIG COND	YEAR ON	YEAR ACTUAL	Q	% COND	OB/XF MKT VALUE	NOTES

LAND DESCRIPTION

TOTAL OB/XF 0

LN	USE CODE	CLS	LAND USE DESCRIPTION	CAP	RD	LOC ZONE	FRONT	DEPTH	TOT LND UTS	UNIT TYPE	DT	DPTH FACT	% COND	TOT ADJ	UNIT PRICE	ADJ UNIT PRICE	LAND VALUE	OTHER ADJUSTMENTS AND NOTES	YEAR	DENSITY	DECL	FRZ	YR	CONSRV
1	000800	C	MULTI-FAMILY	100	0006	R-2	50.00	100.00	50.00	FF		1.00	1.00	1.00	6,500.00	6,500.00	325,000							

REVIEW DATE 01/01/2023 BY CD Total Acres: 0.00 Total Land Value: 325,000 Market: 0 Agricultural: 0 Common: 325,000 PRINTED 07/09/2026 BY SYS