LOT 10
IN OR 840/1891
COOPER TERRACE PB 3/15

MIRANDA LORI SMITH & JOSE JR
109 S 16TH ST
FERNANDINA BEACH, FL 32034

2026

00-00-31-1220-0010-0000

BUILDING CHARACTERISTICS

ELEMENT	CD	CONSTRUCTION
Exterior Wall	16	WD FR STUC 80
Exterior Wall	17	CB STUCCO 20
Roof Structur	03	GABLE/HIP 100
Roof Cover	03	COMP SHNGL 100
Interior Wall	05	DRYWALL 100
Interior Floo	12	HARDWOOD 70
Interior Floo	15	HARDTILE 30
Air Condition	03	CENTRAL 100
Heating Type	04	AIR DUCTED 100
Bedrooms		3 100
Bathrooms		2 100
Frame	02	WOOD FRAME 100
Stories	1.	1. 100
Units		0 100
BUD8 Adjustme	02	DIST FB 100
Occupancy	00	NONE 100
Quality	03	Quality Level 03
DOR CODE	0100	SINGLE FAMILY
MAP NUM		MKT AREA 01
NEIGHBORHOOD/LOC	1008.00	

AREA TYPE	TOTAL GROSS AREA	PCT OF BASE	YEAR	TOT ADJ AREA	SUBAREA MARKET VALUE
BAS	960	100	1993	960	99,843
BAS	364	100	2006	364	37,857
BAS	462	100	2006	462	48,049
BAS	554	100	2006	554	57,617
DCK	198	10	2006	20	2,080
FGR	576	55	2006	317	32,969
FOP	132	30	2006	40	4,160
FSP	260	40	2006	104	10,816
TOTALS	3,506			2,821	293,391

MARKET ADJUSTMENTS

TYPE	MDL	EFF. AREA	TOT ADJ PTS	EFF. BASE RATE	REPL. COST NEW	AYB	EYB	ECON	FNCT		NORM	% COND
0100	01	2,821	113.2000	118.86	335,304	1956	2000	0	0	0	12.50	87.50

1 SINGLE FAM 100% - 2001 Heated Area: 2340 HX Base Yr 2001

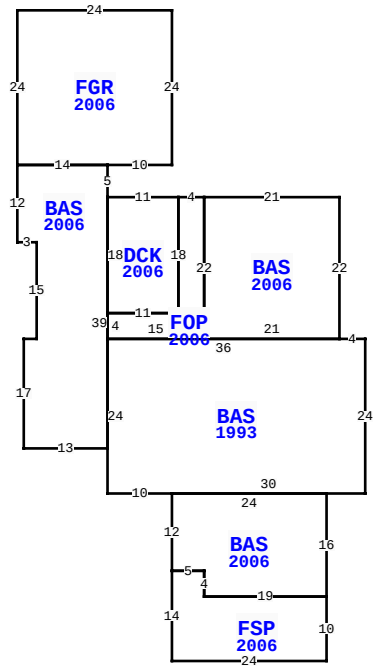

109 S 16TH ST, FERNANDINA BEACH

BLD DATE		LGL DATE	
XF DATE		LAND DATE	03/25/2024 MLU
INC DATE		AG DATE	

NASSAU COUNTY PROPERTY

PAGE 1 of 1 2

VALUATION SUMMARY

VALUATION BY		STANDARD
Tax Group: 2	Tax Dist:	
BUILDING MARKET VALUE		293,391
TOTAL MARKET OB/XF VALUE		2,835
TOTAL LAND VALUE - MARKET		243,600
TOTAL MARKET VALUE		539,826
SOH/AGL Deduction		313,267
ASSESSED VALUE		226,559
TOTAL EXEMPTION VALUE	HX HB	51,411
BASE TAXABLE VALUE		175,148
TOTAL JUST VALUE		539,826
NCON VALUE		0
INCOME VALUE		
PREVIOUS YEAR MKT VALUE		545,410

PERMIT NUM	DESCRIPTION	AMT	ISSUED
20111002	H/AC	9,744	06/20/2011
20110932	REPAIR/RRF	5,100	06/08/2011
20070335	H/AC	3,300	02/22/2007
20070150	GAS	1,000	01/30/2007
20052317	H/AC	1,000	07/28/2005
20052170	ELEC OTHER	3,000	07/07/2005

SALES DATA

OFF RECORD Number	DATE	TYPE INST	Q U /	V I /	RSN CD	SALE PRICE
0840/1891	7/14/1998	WD	U	I		61,500
GRANTOR: JONES ALLAN W & NANCI						
GRANTEE: MIRANDA LORI SMITH						
0322/0182	9/01/1980	WD	Q	I		24,500
GRANTOR:						
GRANTEE:						

BUILDING NOTES

BUILDING DIMENSIONS

BAS=[YR=1993] W4 BAS=[YR=2006] N22 W21 FOP=[YR=2006] W4 DCK=[YR=2006] W11 BAS=[YR=2006] N5 FGR=[YR=2006] E10 N24 W24 S24 E14 $ W14 S12 E3 S15 W2 S17 E13 N39 $ S18 E11 N18 $ S18 W11 S4 E15 N22 $ S22 E21 $ W36 S24 E10 BAS=[YR=2006] S12 FSP=[YR=2006] S14 E24 N10 W19 N4 W5 $ E5 S4 E19 N16 W24 $ E30 N24 $.

EXTRA FEATURES

LN	OB/XF CODE	DESCRIPTION	BLD	CAP	L	W	UNITS	UT	Adj R	ADJ UNIT PRICE	ORIG COND	YEAR ON	YEAR ACTUAL	Q	% COND	OB/XF MKT VALUE	NOTES
1	0500	FP-PRE FAB	0	100	0	0	1.00	UT	3,500.00	3,500.00	100	2000	2000	3	81	2,835	

LAND DESCRIPTION

TOTAL OB/XF 2,835

LN	USE CODE	CLS	LAND USE DESCRIPTION	CAP	RD	LOC ZONE	FRONT	DEPTH	TOT LND UTS	UNIT TYPE	DT	DPTH FACT	% COND	TOT ADJ	UNIT PRICE	ADJ UNIT PRICE	LAND VALUE	OTHER ADJUSTMENTS AND NOTES	YEAR	DENSITY	DECL	FRZ	YR	CONSRV
1	000100	C	RES	100	0006	R-1	75.00	153.00	75.00	FF	1	1.16	1.00	1.16	2,800.00	3,248.00	243,600							

REVIEW DATE 01/01/2023 BY CD Total Acres: 0.00 Total Land Value: 243,600 Market: 0 Agricultural: 0 Common: 243,600 PRINTED 07/09/2026 BY SYS