BLOCK 7 LOT 2
BUCKS FDNA BEACH 2 PB 3/17

HARPER RICKY A & CATHERINE B
2561 1ST AVENUE
FERNANDINA BEACH, FL 32034

2026

00-00-31-114B-0007-0020

BUILDING CHARACTERISTICS

ELEMENT	CD	CONSTRUCTION
Exterior Wall	10	ABOVE AVG 100
Roof Structur	03	GABLE/HIP 100
Roof Cover	03	COMP SHNGL 100
Interior Wall	05	DRYWALL 100
Interior Floo	13	LVT/LAMNT 90
Interior Floo	11	CLAY TILE 10
Air Condition	03	CENTRAL 100
Heating Type	03	FORCED AIR 100
Bedrooms		2 100
Bathrooms		3 100
Frame	02	WOOD FRAME 100
Stories	2.	2. 100
Units		0 100
Quality	03	Quality Level 03
DOR CODE	0100	SINGLE FAMILY
MAP NUM		MKT AREA 01
NEIGHBORHOOD/LOC	1043.00	

AREA TYPE	TOTAL GROSS AREA	PCT OF BASE	YEAR	TOT ADJ AREA	SUBAREA MARKET VALUE
BAS	852	100	2024	852	151,440
FCP	751	25	2024	188	33,416
FOP	154	30	2024	46	8,176
FOP	696	30	2024	209	37,149
FST	135	55	2024	74	13,153
FUS	1,269	100	2024	1,269	225,561
STR	48	10	2024	5	889
TOTALS	3,905			2,643	469,785

MARKET ADJUSTMENTS

TYPE	MDL	EFF. AREA	TOT ADJ PTS	EFF. BASE RATE	REPL. COST NEW	AYB	EYB	ECON	FNCT		NORM	% COND
0500	01	2,643	107.6160	178.64	472,146	2023	2023	0	0	0	0.50	99.50

1 SFR CUST 100% - 2024 Heated Area: 2121 HX Base Yr 2024

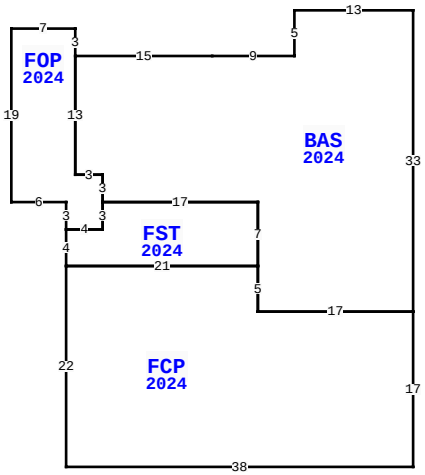

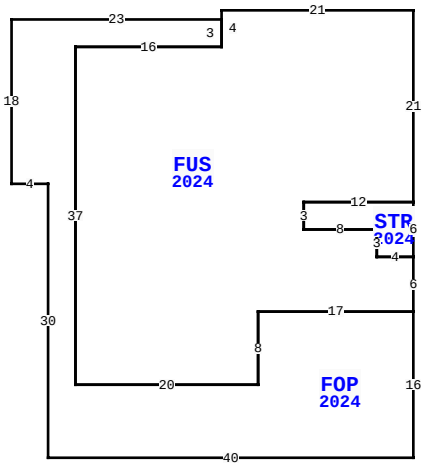

2561 1ST AV, FERNANDINA BEACH

BLD DATE		LGL DATE	
XF DATE		LAND DATE	05/08/2025 MLU
INC DATE		AG DATE	

NASSAU COUNTY PROPERTY

PAGE 1 of 1 2

VALUATION SUMMARY

VALUATION BY		STANDARD
Tax Group: 2	Tax Dist:	
BUILDING MARKET VALUE		469,785
TOTAL MARKET OB/XF VALUE		1,980
TOTAL LAND VALUE - MARKET		360,000
TOTAL MARKET VALUE		831,765
SOH/AGL Deduction		86,632
ASSESSED VALUE		745,133
TOTAL EXEMPTION VALUE	DX HX HB	56,411
BASE TAXABLE VALUE		688,722
TOTAL JUST VALUE		831,765
NCON VALUE		0
INCOME VALUE		
PREVIOUS YEAR MKT VALUE		817,851

PERMIT NUM	DESCRIPTION	AMT	ISSUED
BLDR-2020-0	"CONSTRUCT NEW S/		12/21/2023
20200862	NEW CONSTR	0	12/01/2020

SALES DATA

OFF RECORD Number	DATE	TYPE INST	Q / U	V / I	RSN CD	SALE PRICE
2380/1823	7/30/2020	WD	Q	V	01	215,000
GRANTOR: RIVER GREEN ESTATES L						
GRANTEE: HARPER RICKY A & CA						
2197/0545	5/17/2018	WD	Q	V	05	345,000
GRANTOR: GAETA MARY DORR ET AL						
GRANTEE: RIVER GREEN ESTATES						

BUILDING NOTES

EXTRA FEATURES

LN	OB/XF CODE	DESCRIPTION	BLD	CAP	L	W	UNITS	UT	Adj R	ADJ UNIT PRICE	ORIG COND	YEAR ON	YEAR ACTUAL	Q	% COND	OB/XF MKT VALUE	NOTES
3	0504	FP-ELECTRI	0	100	0	0	1.00	UT	2,000.00	2,000.00	100	2024	2023		99	1,980	

BUILDING DIMENSIONS

BAS=[YR=2024;ORIG=80,10] W13 S5 W9 W15 S13 E3 S3 E17 S7 S5 E17 N33 $
FST=[YR=2024;ORIG=63,31] W17 S3 W4 S4 E21 N7 $
FOP=[YR=2024;ORIG=43,15] N3 W7 S19 E6 S3 E4 N3 N3 W3 N13 $
FCP=[YR=2024;ORIG=80,43] W17 N5 W21 S22 E38 N17 $
FUS=[YR=2024;ORIG=135,10] W21 S4 W16 S37 E20 N8 E17 N6 W4 N3 W8 N3 E12 N21 $
STR=[YR=2024;ORIG=123,31] E12 S6 W4 N3 W8 N3 $
FOP=[YR=2024;ORIG=118,43] E17 S16 W40 N30 W4 N18 E23 S3 W16 S37 E20 N8 $
.

LAND DESCRIPTION

TOTAL OB/XF 1,980

LN	USE CODE	CLS	LAND USE DESCRIPTION	CAP	RD	LOC ZONE	FRONT	DEPTH	TOT LND UTS	UNIT TYPE	DT	DPTH FACT	% COND	TOT ADJ	UNIT PRICE	ADJ UNIT PRICE	LAND VALUE	OTHER ADJUSTMENTS AND NOTES	YEAR	DENSITY	DECL	FRZ	YR	CONSRV
1	000100	C	RES	100		R-2	60.00	115.00	60.00	FF		1.00	1.00	1.00	6,000.00	6,000.00	360,000							

REVIEW DATE 02/12/2024 BY DJ Total Acres: 0.00 Total Land Value: 360,000 Market: 0 Agricultural: 0 Common: 360,000 PRINTED 07/09/2026 BY SYS