BLOCK 5 LOT 5
IN OR 2055/629
BUCKS FDNA BEACH 2 PB 3/17

CORNELL MARY ELLEN K/KRESSE NICOLE M
2408 1ST AVE
FERNANDINA BEACH, FL 32034

2026

00-00-31-114B-0005-0050

BUILDING CHARACTERISTICS

ELEMENT	CD	CONSTRUCTION
Exterior Wall	12	CEDAR 100
Roof Structur	03	GABLE/HIP 100
Roof Cover	03	COMP SHNGL 100
Interior Wall	05	DRYWALL 100
Interior Floo	11	CLAY TILE 50
Interior Floo	14	CARPET 50
Air Condition	03	CENTRAL 100
Heating Type	04	AIR DUCTED 100
Bedrooms		4 100
Bathrooms		3 100
Frame	02	WOOD FRAME 100
Stories	3.	3. 100
Units		0 100
BUD8 Adjustme	02	DIST FB 100
Occupancy	00	NONE 100
Quality	03	Quality Level 03

DOR CODE	0800	MULTI-FAMILY	
MAP NUM		MKT AREA	01
NEIGHBORHOOD/LOC	1043.00		

AREA TYPE	TOTAL GROSS AREA	PCT OF BASE	YEAR	TOT ADJ AREA	SUBAREA MARKET VALUE
BAS	544	100	1993	544	73,734
FCP	176	25	1993	44	5,964
FOP	28	30	1993	8	1,085
FST	90	55	1993	50	6,777
FUS	544	100	1993	544	73,734
HXB	576	100	1993	576	78,072
HXB	576	100	1993	576	78,072
HXC	176	25	1993	44	5,964
HXP	32	30	1993	10	1,356
HXP	58	30	1993	17	2,304
TOTALS	3,266			2,560	346,985

MARKET ADJUSTMENTS

TYPE	MDL	EFF. AREA	TOT ADJ PTS	EFF. BASE RATE	REPL. COST NEW	AYB	EYB	ECON	FNCT		NORM	% COND
2700	01	2,560	114.7200	159.46	408,218	1987	1995	0	0	0	15.00	85.00

1 DUPLEX 52.03% - 2017 Heated Area: 2240 HX Base Yr 2017

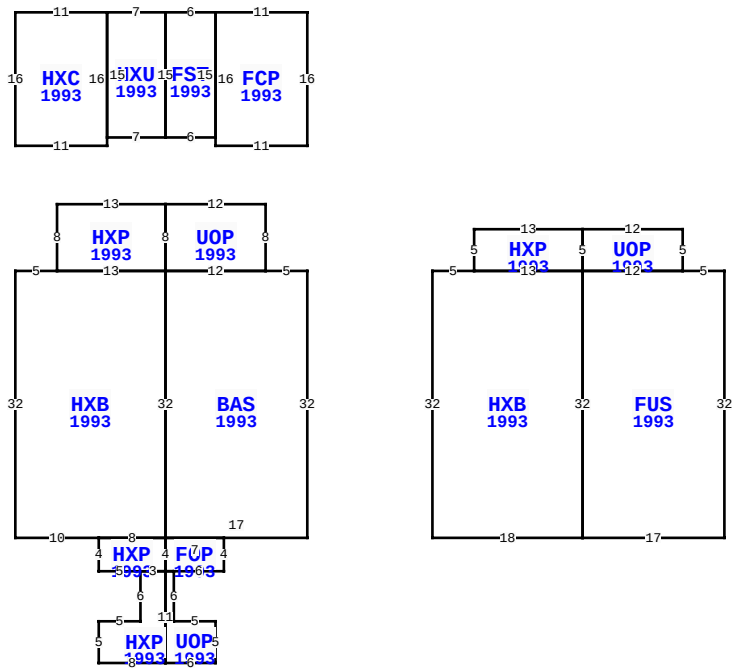

** This building has 16 Sub-Areas

2408 1ST AVE, FERNANDINA BEACH

BLD DATE		LGL DATE	
XF DATE		LAND DATE	05/08/2025 MLU
INC DATE		AG DATE	

NASSAU COUNTY PROPERTY

PAGE 1 of 1 2

VALUATION SUMMARY

VALUATION BY		STANDARD
Tax Group: 2	Tax Dist:	
BUILDING MARKET VALUE		346,985
TOTAL MARKET OB/XF VALUE		169
TOTAL LAND VALUE - MARKET		300,000
TOTAL MARKET VALUE		647,154
SOH/AGL Deduction		287,964
ASSESSED VALUE		359,190
TOTAL EXEMPTION VALUE	HX HB WX	56,411
BASE TAXABLE VALUE		302,779
TOTAL JUST VALUE		647,154
NCON VALUE		0
INCOME VALUE		
PREVIOUS YEAR MKT VALUE		634,310

PERMIT NUM	DESCRIPTION	AMT	ISSUED
20200380	REMODEL	31,948	06/25/2020
B9710589	REPAIR/RRF	2,295	07/08/1997

SALES DATA

OFF RECORD Number	DATE	TYPE INST	Q U	V I	RSN CD	SALE PRICE
2055/0629	6/23/2016	WD	Q	I	01	350,000
GRANTOR: PALMER J PATRICK & JO						
GRANTEE: CORNELL MARY ELLEN						
1962/0685	1/29/2015	WD	U	I	16	120,000
GRANTOR: PALMER SHAWN E & CHER						
GRANTEE: PALMER JOHN A & JAN						

BUILDING NOTES

BUILDING DIMENSIONS

BAS=[YR=1993] W5 UOP=[YR=1993] N8 W12 HXP=[YR=1993] W13 S8 HXB=[YR=1993] W5 S32 E10 HXP=[YR=1993] S4 E5 HXP=[YR=1993] S6 W5 S5 E8 UOP=[YR=1993] E6 N5 W5 N6 FOP=[YR=1993] E6 N4 W7 S4 E1 $ W1 S11 $ N11 W3 $ E3 N4 W8 $ E8 N32 W13 $ E13 N8 $ S8 E12 $ W12 S32 E17 N32 $ PTR= E15 HXB=[YR=1993] E5 HXP=[YR=1993] N5 E13 UOP=[YR=1993] E12 S5 FUS=[YR=1993] E5 S32 W17 N32 E12 $ W12 N5 $ S5 W13 $ E13 S32 W18 N32 $ W15 $ PTR= N15 FCP=[YR=1993] N16 W11 FST=[YR=1993] W6 HXU=[YR=1993] W7 HXC=[YR=1993] W11 S16 E11 N16 $ S15 E7 N15 $ S15 E6 N15 $ S16 E11 $ S15 $.

EXTRA FEATURES

LN	OB/XF CODE	DESCRIPTION	BLD	CAP	L	W	UNITS	UT	Adj R	ADJ UNIT PRICE	ORIG COND	YEAR ON	YEAR ACTUAL	Q	% COND	OB/XF MKT VALUE	NOTES
2	0820	WOOD WALK	0	100	12	3	36.00	SF	11.75	11.75	100	1990	1990	3	40	169	

LAND DESCRIPTION

TOTAL OB/XF 169

LN	USE CODE	CLS	LAND USE DESCRIPTION	CAP	RD	LOC ZONE	FRONT	DEPTH	TOT LND UTS	UNIT TYPE	DT	DPTH FACT	% COND	TOT ADJ	UNIT PRICE	ADJ UNIT PRICE	LAND VALUE	OTHER ADJUSTMENTS AND NOTES	YEAR	DENSITY	DECL	FRZ	YR	CONSRV
1	000800	C	MULTI-FAMILY	100		R-2	50.00	115.00	50.00	FF		1.00	1.00	1.00	6,000.00	6,000.00	300,000							

REVIEW DATE 06/06/2024 BY KBA Total Acres: 0.00 Total Land Value: 300,000 Market: 0 Agricultural: 0 Common: 300,000 PRINTED 07/09/2026 BY SYS