LOT 58
IN OR 1534/1199
BUCKS FDNA BEACH #1 PB 2/30

PLATT LIVING TRUST/PLATT JOSEPH M TRUSTEE
2676 SOUTH FLETCHER AVE
FERNANDINA BEACH, FL 32034

2026

00-00-31-114A-0058-0000

BUILDING CHARACTERISTICS

ELEMENT	CD	CONSTRUCTION
Exterior Wall	06	BD/BATTEN 50
Exterior Wall	23	REINF CONC 50
Roof Structur	03	GABLE/HIP 100
Roof Cover	03	COMP SHNGL 100
Interior Wall	05	DRYWALL 100
Interior Floo	11	CLAY TILE 50
Interior Floo	14	CARPET 50
Air Condition	03	CENTRAL 100
Heating Type	04	AIR DUCTED 100
Bedrooms		6 100
Bathrooms		6 100
Frame	02	WOOD FRAME 100
Stories	2.	2. 100
Units		0 100
BUD8 Adjustme	02	DIST FB 100
Occupancy	00	NONE 100
Quality	06	Quality Level 06
DOR CODE	0800	MULTI-FAMILY
MAP NUM		MKT AREA 01
NEIGHBORHOOD/LOC	1052.00	

AREA TYPE	TOTAL GROSS AREA	PCT OF BASE	YEAR	TOT ADJ AREA	SUBAREA MARKET VALUE
APT	630	100	1993	630	109,506
APT	900	100	1993	900	156,437
BAS	217	100	2007	217	37,718
DCK	344	10	2007	34	5,910
HXB	1,831	100	1993	1,831	318,263
HXP	12	30	1993	4	695
HXP	36	30	1993	11	1,912
HXP	312	30	1993	94	16,339
HXP	8	30	2007	2	348
HXU	52	55	2007	29	5,041
TOTALS	4,865			3,903	678,416

MARKET ADJUSTMENTS

TYPE	MDL	EFF. AREA	TOT ADJ PTS	EFF. BASE RATE	REPL. COST NEW	AYB	EYB	ECON	FNCT		NORM	% COND
2800	11	3,903	150.3765	206.02	804,096	1948	2000	0	0	0	15.63	84.37

1 TRI PLEX 52.61% - 1991 Heated Area: 3578 HX Base Yr 1991

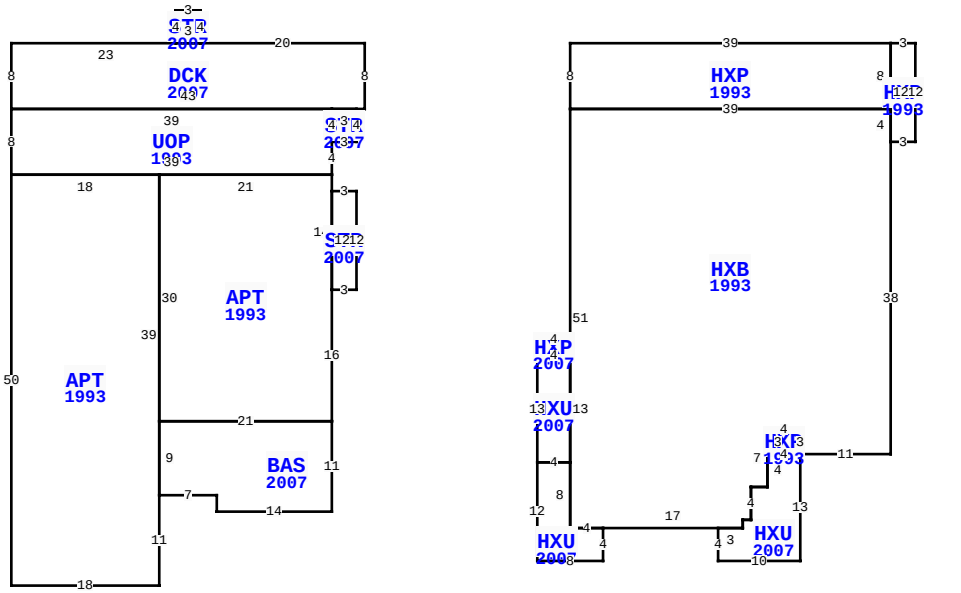

** This building has 16 Sub-Areas

2676 S FLETCHER AVE, FERNANDINA BEACH

BLD DATE		LGL DATE	
XF DATE		LAND DATE	04/27/2026 MLU
INC DATE		AG DATE	

NASSAU COUNTY PROPERTY

PAGE 1 of 1 2

VALUATION SUMMARY

VALUATION BY		STANDARD
Tax Group: 2	Tax Dist:	
BUILDING MARKET VALUE		678,416
TOTAL MARKET OB/XF VALUE		0
TOTAL LAND VALUE - MARKET		1,050,000
TOTAL MARKET VALUE		1,728,416
SOH/AGL Deduction		1,268,936
ASSESSED VALUE		459,480
TOTAL EXEMPTION VALUE	HX HB	51,411
BASE TAXABLE VALUE		408,069
TOTAL JUST VALUE		1,728,416
NCON VALUE		0
INCOME VALUE		
PREVIOUS YEAR MKT VALUE		1,291,802

PERMIT NUM	DESCRIPTION	AMT	ISSUED
20221141	REPAIR/RRF	0	09/21/2022
20190056	DECK	0	01/15/2019
20111304	REPAIR/RRF	500	08/05/2011
20100731	H/AC	4,000	05/04/2010
20100075	REPAIR/RRF	1,295	01/14/2010
20100020	REPAIR/REPAIR/RRF	1,800	01/07/2010

SALES DATA

OFF RECORD Number	DATE	TYPE INST	Q / U	V / I	RSN CD	SALE PRICE
2220/1709	9/06/2018	QC	U	I	11	100
GRANTOR: PLATT JOSEPH M						
GRANTEE: PLATT JOSEPH M & BR						
1534/1199	11/07/2007	WD	U	I	10	100
GRANTOR: PLATT JOSEPH M & BREN						
GRANTEE: PLATT JOSEPH M & BR						

BUILDING NOTES

BUILDING DIMENSIONS

DCK=[YR=2007] W20 STR=[YR=2007] N4 W3 S4 E3$ W23 S8
UOP=[YR=1993] S8 APT=[YR=1993] S50 E18 N11 BAS=[YR=2007] E7
S2 E14 N11 APT=[YR=1993] N16 STR=[YR=2007] E3 N12 W3 S12$ N14
W21 S30 E21$ W21 S9$ N39 W18$ E39 N4 STR=[YR=2007] E3 N4 W3
S4$ N4 W39$ E43 N8$PTR= E25 HXP=[YR=1993] E39 HXP=[YR=1993]
E3 S12 W3 HXB=[YR=1993] S38 W11 HXU=[YR=2007] S13 W10 N4 E3
N1 E1 N4 E2 N4 E4$ HXP=[YR=1993] W4 N3 E4 S3$ N3 W4 S7 W2S4
W1 S1 W17 HXU=[YR=2007] S4 W8 N12 HXU=[YR=2007] N13
HXP=[YR=2007] N2 E4 S2 W4$ E4 S13 W4 $ E4 S8 E4$ W4 N51 E39
S4$ N12 $ S8 W39 N8$ W25$.

EXTRA FEATURES

LN	OB/XF CODE	DESCRIPTION	BLD	CAP	L	W	UNITS	UT	Adj R	ADJ UNIT PRICE	ORIG COND	YEAR ON	YEAR ACTUAL	Q	% COND	OB/XF MKT VALUE	NOTES

LAND DESCRIPTION

TOTAL OB/XF 0

LN	USE CODE	CLS	LAND USE DESCRIPTION	CAP	RD	LOC ZONE	FRONT	DEPTH	TOT LND UTS	UNIT TYPE	DT	DPTH FACT	% COND	TOT ADJ	UNIT PRICE	ADJ UNIT PRICE	LAND VALUE	OTHER ADJUSTMENTS AND NOTES	YEAR	DENSITY	DECL	FRZ	YR	CONSRV
1	000120	C	RES OCEAN	100		R-2	50.00	290.00	50.00	FF		1.00	1.00	1.00	21,000.00	21,000.00	1,050,000							

REVIEW DATE 01/06/2023 BY HSA Total Acres: 0.00 Total Land Value: 1,050,000 Market: 0 Agricultural: 0 Common: 1,050,000 PRINTED 07/09/2026 BY SYS