LOT 57
IN OR 1442/326
BUCKS FDNA BEACH 1 PB 2/30

JORDAN FLORIDA RENTALS LLC
10689 BIG CANOE
JASPER, GA 30143

2026

00-00-31-114A-0057-0000

NASSAU COUNTY PROPERTY

BUILDING CHARACTERISTICS

ELEMENT	CD	CONSTRUCTION
Exterior Wall	07	ASB SHNGLE 50
Exterior Wall	15	CONC BLOCK 50
Roof Structur	03	GABLE/HIP 100
Roof Cover	03	COMP SHNGL 100
Interior Wall	05	DRYWALL 100
Interior Floo	12	HARDWOOD 80
Interior Floo	11	CLAY TILE 20
Air Condition	03	CENTRAL 100
Heating Type	04	AIR DUCTED 100
Bedrooms		4 100
Bathrooms		2 100
Frame	03	MASONRY 100
Stories	2.	2. 100
Units		0 100
BUD8 Adjustme	02	DIST FB 100
Occupancy	00	NONE 100
Quality	06	Quality Level 06

DOR CODE 0800 MULTI-FAMILY
MAP NUM | MKT AREA 01
NEIGHBORHOOD/LOC 1052.00

AREA TYPE	TOTAL GROSS AREA	PCT OF BASE	YEAR	TOT ADJ AREA	SUBAREA MARKET VALUE
APT	720	100	1993	720	105,085
APT	720	100	1993	720	105,085
DCK	78	10	1993	8	1,168
DCK	117	10	1993	12	1,752
DCK	80	10	1997	8	1,168
PTO	91	5	1993	5	730
STR	56	10	1993	6	876
UOP	78	20	1993	16	2,335
UOP	117	20	1993	23	3,357
TOTALS	2,057			1,518	221,555

MARKET ADJUSTMENTS

TYPE	MDL	EFF. AREA	TOT ADJ PTS	EFF. BASE RATE	REPL. COST NEW	AYB	EYB	ECON	FNCT		NORM	% COND
2700	01	1,518	124.4553	172.99	262,599	1950	2000	0	0	0	15.63	84.37

1 DUPLEX 0% - 0 Heated Area: 1440 HX Base Yr

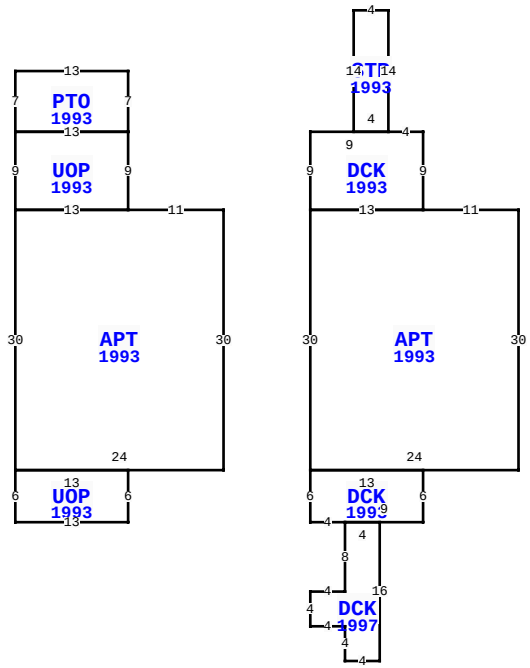

2666 S FLETCHER AVE, FERNANDINA BEACH

BLD DATE		LGL DATE	
XF DATE		LAND DATE	04/27/2026 MLU
INC DATE		AG DATE	

VALUATION SUMMARY

VALUATION BY	STANDARD
Tax Group: 2	Tax Dist:
BUILDING MARKET VALUE	221,555
TOTAL MARKET OB/XF VALUE	0
TOTAL LAND VALUE - MARKET	1,050,000
TOTAL MARKET VALUE	1,271,555
SOH/AGL Deduction	117,061
ASSESSED VALUE	1,154,494
TOTAL EXEMPTION VALUE	0
BASE TAXABLE VALUE	1,154,494
TOTAL JUST VALUE	1,271,555
NCON VALUE	0
INCOME VALUE	
PREVIOUS YEAR MKT VALUE	1,128,703

PERMIT NUM	DESCRIPTION	AMT	ISSUED
B969922	REPAIR/RRF	2,310	07/16/1996
B9088	REPAIR/RRF	2,503	05/19/1995

SALES DATA

OFF RECORD Number	DATE	TYPE INST	Q / U	V / I	RSN CD	SALE PRICE
1442/0326	9/05/2006	WD	U	I	19	618,900
GRANTOR: JORDAN EVELYN ANN						
GRANTEE: JORDAN FLORIDA RENT						
0223/0006	6/21/1976	WD	U	I		21,900
GRANTOR: HILDRETH LAWRENEC M &						
GRANTEE: JORDAN JAMES RALPH						

BUILDING NOTES

EXTRA FEATURES

LN	OB/XF CODE	DESCRIPTION	BLD	CAP	L	W	UNITS	UT	Adj R	ADJ UNIT PRICE	ORIG COND	YEAR ON	YEAR ACTUAL	Q	% COND	OB/XF MKT VALUE	NOTES

BUILDING DIMENSIONS

```
APT=[YR=1993;ORIG=0,0] W11 W13 S30 E24 N30 $
APT=[YR=1993;ORIG=10,0] S30 E24 N30 W11 W13 $
UOP=[YR=1993;ORIG=-11,0] N9 W13 S9 E13 $
DCK=[YR=1993;ORIG=23,0] N9 W4 W9 S9 E13 $
PTO=[YR=1993;ORIG=-11,-9] N7 W13 S7 E13 $
DCK=[YR=1997;ORIG=14,36] S8 W4 S4 E4 S4 E4 N16 W4 $
UOP=[YR=1993;ORIG=-24,30] S6 E13 N6 W13 $
DCK=[YR=1993;ORIG=10,30] S6 E4 E9 N6 W13 $
STR=[YR=1993;ORIG=19,-9] N14 W4 S14 E4 $
PTR=[ORIG=0,0] E10 W10 $
.
```

LAND DESCRIPTION

TOTAL OB/XF 0

LN	USE CODE	CLS	LAND USE DESCRIPTION	CAP	RD	LOC ZONE	FRONT	DEPTH	TOT LND UTS	UNIT TYPE	DT	DPTH FACT	% COND	TOT ADJ	UNIT PRICE	ADJ UNIT PRICE	LAND VALUE	OTHER ADJUSTMENTS AND NOTES	YEAR	DENSITY	DECL	FRZ	YR	CONSRV
1	000120	C	RES OCEAN	0		R-2	50.00	290.00	50.00	FF		1.00	1.00	1.00	21,000.00	21,000.00	1,050,000							

REVIEW DATE 06/06/2024 BY KBA Total Acres: 0.00 Total Land Value: 1,050,000 Market: 0 Agricultural: 0 Common: 1,050,000 PRINTED 07/09/2026 BY SYS