LOT 3
AMELIA PARK COTTAGE BLOCK
PB 7/211

WILLIAMS FAMILY LIVING TRUST/WILLIAMS MARK RILEY C
1767 GARDENIA STREET
FERNANDINA BEACH, FL 32034

2026

00-00-31-102R-0003-0000

BUILDING CHARACTERISTICS

ELEMENT	CD	CONSTRUCTION
Exterior Wall	10	ABOVE AVG 100
Roof Structur	08	IRREGULAR 100
Roof Cover	03	COMP SHNGL 100
Interior Wall	05	DRYWALL 100
Interior Floo	11	CLAY TILE 70
Interior Floo	14	CARPET 30
Air Condition	03	CENTRAL 100
Heating Type	04	AIR DUCTED 100
Bedrooms		4 100
Bathrooms		3 100
Frame	02	WOOD FRAME 100
Stories	2.	2. 100
Units		0 100
Occupancy	00	NONE 100
Quality	06	Quality Level 06

DOR CODE 0100 SINGLE FAMILY
MAP NUM | MKT AREA 01
NEIGHBORHOOD/LOC 1031.00

AREA TYPE	TOTAL GROSS AREA	PCT OF BASE	YEAR	TOT ADJ AREA	SUBAREA MARKET VALUE
BAS	1,956	100	2014	1,956	391,950
FGR	598	55	2014	329	65,926
FOP	168	30	2014	50	10,020
FSP	507	40	2014	203	40,678
FUS	628	100	2014	628	125,841
STP	6	10	2014	1	200
TOTALS	3,863			3,167	634,614

MARKET ADJUSTMENTS

TYPE	MDL	EFF. AREA	TOT ADJ PTS	EFF. BASE RATE	REPL. COST NEW	AYB	EYB	ECON	FNCT		NORM	% COND
0500	01	3,167	127.0658	210.93	668,015	2014	2014	0	0	0	5.00	95.00

1 SFR CUST 100% - 2024 Heated Area: 2584 HX Base Yr 2024

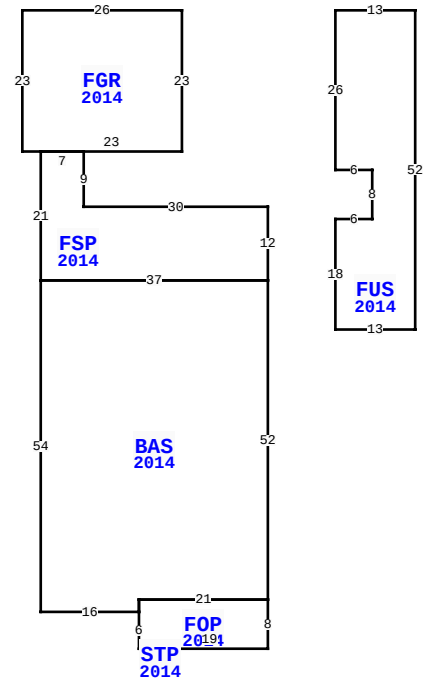

1767 GARDENIA ST, FERNANDINA BEACH

BLD DATE		LGL DATE	
XF DATE		LAND DATE	05/08/2025 MLU
INC DATE		AG DATE	

NASSAU COUNTY PROPERTY

PAGE 1 of 1 2

VALUATION SUMMARY

VALUATION BY		STANDARD
Tax Group: 2	Tax Dist:	
BUILDING MARKET VALUE		634,614
TOTAL MARKET OB/XF VALUE		49,613
TOTAL LAND VALUE - MARKET		250,000
TOTAL MARKET VALUE		934,227
SOH/AGL Deduction		24,030
ASSESSED VALUE		910,197
TOTAL EXEMPTION VALUE	HX HB	51,411
BASE TAXABLE VALUE		858,786
TOTAL JUST VALUE		934,227
NCON VALUE		0
INCOME VALUE		
PREVIOUS YEAR MKT VALUE		940,800

PERMIT NUM	DESCRIPTION	AMT	ISSUED
20132278	SWIM POOL	24,905	09/27/2013
20131464	NEW CONSTR	11,700	06/25/2013
20131436	NEW CONSTR	2,000	06/21/2013
20131312	NEW CONSTR	393,000	06/11/2013

SALES DATA

OFF RECORD Number	DATE	TYPE INST	Q / U	V / I	RSN CD	SALE PRICE
2642/1368	5/24/2023	WD	Q	I	01	1,133,000
GRANTOR: MCCOURT CHARLES B REV						
GRANTEE: WILLIAMS FAMILY LIV						
2018/0933	10/22/2015	QC	U	I	11	100
GRANTOR: MCCOURT CHARLES BRIAN						
GRANTEE: CHARLES BRIAN MCCOU						

BUILDING NOTES

BUILDING DIMENSIONS

FGR=[YR=2014] W26 S23 E3 FSP=[YR=2014] S21 BAS=[YR=2014] S54 E16 FOP=[YR=2014] S6 E2 STP=[YR=2014] S2 E3 N2 W3$ E19 N8 W21 S2$ N2 E21 N52 W37$ E37 N12 W30 N9 W7$ E23 N23$ PTR= E25 FUS=[YR=2014] E13 S52 W13 N18 E6 N8 W6 N26$ W25$.

EXTRA FEATURES

L N	OB/XF CODE	DESCRIPTION	BLD	CAP	L	W	UNITS	UT	Adj R	ADJ UNIT PRICE	ORIG COND	YEAR ON	YEAR ACTUAL	Q	% COND	OB/XF MKT VALUE	NOTES
6	0860	POOL/SPA	0	100	0	0	1.00	UT	50,000.00	50,000.00	100	2014	2014	04	90	45,000	
7	0911	SCRN RM A	0	100	0	0	466.00	SF	18.00	18.00	100	2014	2014	3	55	4,613	

LAND DESCRIPTION

TOTAL OB/XF 49,613

L N	USE CODE	CLS	LAND USE DESCRIPTION	CAP	R D	LOC ZONE	FRONT	DEPTH	TOT LND UTS	UNIT TYPE	D T	DPTH FACT	% COND	TOT ADJ	UNIT PRICE	ADJ UNIT PRICE	LAND VALUE	OTHER ADJUSTMENTS AND NOTES	YEAR	DENSITY	DECL	FRZ	YR	CONSRV
1	000100	C	RES	100		R-2	0.00	0.00	50.00	FF		1.00	1.00	1.00	5,000.00	5,000.00	250,000							

REVIEW DATE 01/01/2023 BY CD Total Acres: 0.00 Total Land Value: 250,000 Market: 0 Agricultural: 0 Common: 250,000 PRINTED 07/09/2026 BY SYS