BLOCK 24 LOT 2
IN OR 2196/1139
AMELIA PARK PHASE 2 UNIT 9

QUEENEY KENNETH M & VICTORIA A
1649 OLMSTED LN
FERNANDINA BEACH, FL 32034

2026

00-00-31-102P-0024-0020

NASSAU COUNTY PROPERTY

BUILDING CHARACTERISTICS

ELEMENT	CD	CONSTRUCTION
Exterior Wall	10	ABOVE AVG 100
Roof Structur	08	IRREGULAR 100
Roof Cover	03	COMP SHNGL 100
Interior Wall	05	DRYWALL 100
Interior Floo	12	HARDWOOD 70
Interior Floo	14	CARPET 30
Air Condition	03	CENTRAL 100
Heating Type	04	AIR DUCTED 100
Bedrooms		3 100
Bathrooms		2.5 100
Frame	02	WOOD FRAME 100
Stories	2.	2. 100
Units		0 100
Occupancy	00	NONE 100
Quality	06	Quality Level 06
DOR CODE	0100	SINGLE FAMILY
MAP NUM		MKT AREA 01
NEIGHBORHOOD/LOC	1031.00	

AREA TYPE	TOTAL GROSS AREA	PCT OF BASE	YEAR	TOT ADJ AREA	SUBAREA MARKET VALUE
BAS	1,504	100	2019	1,504	312,507
FGR	560	55	2019	308	63,998
FOP	128	30	2019	38	7,896
FOP	128	30	2019	38	7,896
FUS	504	100	2019	504	104,723
STP	24	10	2019	2	415
STP	32	10	2019	3	624
STR	72	10	2019	7	1,454
TOTALS	2,952			2,404	499,512

MARKET ADJUSTMENTS

TYPE	MDL	EFF. AREA	TOT ADJ PTS	EFF. BASE RATE	REPL. COST NEW	AYB	EYB	ECON	FNCT		NORM	% COND
0500	01	2,404	129.0415	214.21	514,961	2018	2018	0	0	0	3.00	97.00

1 SFR CUST 100% - 2020 Heated Area: 2008 HX Base Yr 2020

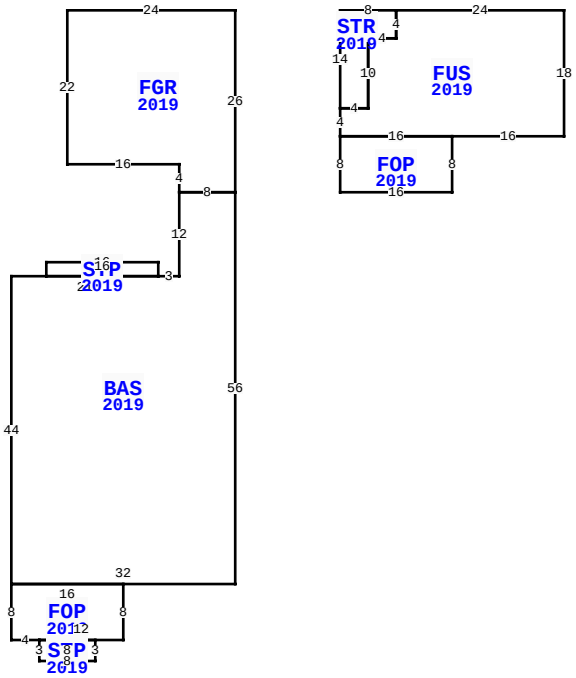

1649 OLMSTED LN, FERNANDINA BEACH

BLD DATE		LGL DATE	
XF DATE		LAND DATE	05/08/2025 MLU
INC DATE		AG DATE	

VALUATION SUMMARY

VALUATION BY		STANDARD
Tax Group: 2	Tax Dist:	
BUILDING MARKET VALUE		499,512
TOTAL MARKET OB/XF VALUE		0
TOTAL LAND VALUE - MARKET		200,000
TOTAL MARKET VALUE		699,512
SOH/AGL Deduction		223,403
ASSESSED VALUE		476,109
TOTAL EXEMPTION VALUE	HX HB	51,411
BASE TAXABLE VALUE		424,698
TOTAL JUST VALUE		699,512
NCON VALUE		0
INCOME VALUE		
PREVIOUS YEAR MKT VALUE		730,928

PERMIT NUM	DESCRIPTION	AMT	ISSUED
20183956	NEW CONSTR	283,823	11/19/2018

SALES DATA

OFF RECORD Number	DATE	TYPE INST	Q U	V I	RSN CD	SALE PRICE
2196/1139	5/15/2018	WD	Q	V	02	105,000
GRANTOR: DEEN MICHAEL EARL, P						
GRANTEE: QUEENEY KENNETH M &						
2077/1932	10/18/2016	QC	U	V	11	100
GRANTOR: DEEN MICHAEL E						
GRANTEE: DEEN MICHAEL EARL,						

BUILDING NOTES

BUILDING DIMENSIONS

FGR=[YR=2019] W24 S22 E16 S4 BAS=[YR=2019] S12 W3
STP=[YR=2019] N2 W16 S2 E16$ W21 S44 FOP=[YR=2019] S8 E4
STP=[YR=2019] S3 E8 N3 W8$ E12 N8 W16$ E32 N56 W8$ E8 N26$
PTR= E15 STR=[YR=2019] E8 FUS=[YR=2019] E24 S18 W16
FOP=[YR=2019] S8 W16 N8 E16$ W16 N4 E4 N10 E4 N4$ S4 W4 S10
W4 N14$ W15$.

EXTRA FEATURES

LN	OB/XF CODE	DESCRIPTION	BLD	CAP	L	W	UNITS	UT	Adj R	ADJ UNIT PRICE	ORIG COND	YEAR ON	YEAR ACTUAL	Q	% COND	OB/XF MKT VALUE	NOTES

LAND DESCRIPTION

TOTAL OB/XF 0

LN	USE CODE	CLS	LAND USE DESCRIPTION	CAP	RD	LOC ZONE	FRONT	DEPTH	TOT LND UTS	UNIT TYPE	DT	DPTH FACT	% COND	TOT ADJ	UNIT PRICE	ADJ UNIT PRICE	LAND VALUE	OTHER ADJUSTMENTS AND NOTES	YEAR	DENSITY	DECL	FRZ	YR	CONSRV
1	000100	C	RES	100		R-2	0.00	0.00	40.00	FF		1.00	1.00	1.00	5,000.00	5,000.00	200,000							

REVIEW DATE 01/01/2023 BY CD Total Acres: 0.00 Total Land Value: 200,000 Market: 0 Agricultural: 0 Common: 200,000 PRINTED 07/09/2026 BY SYS