BLOCK 19 LOT 8
AMELIA PARK PHASE 2 UNIT 8
PB 6/391

FORBES EVE & MARK
1860 NEIGHBOR ST
FERNANDINA BEACH, FL 32034

2026

00-00-31-102P-0019-0080

BUILDING CHARACTERISTICS

ELEMENT	CD	CONSTRUCTION
Exterior Wall	10	ABOVE AVG 100
Roof Structur	08	IRREGULAR 100
Roof Cover	03	COMP SHNGL 90
Roof Cover	01	MINIMUM 10
Interior Wall	05	DRYWALL 80
Interior Wall	08	DECORATIVE 20
Interior Floo	15	HARDTILE 70
Interior Floo	14	CARPET 30
Air Condition	03	CENTRAL 100
Heating Type	04	AIR DUCTED 100
Bedrooms		3 100
Bathrooms		2.5 100
Frame	02	WOOD FRAME 100
Stories	1.	1. 100
Units		0 100
Occupancy	00	NONE 100
Quality	06	Quality Level 06

DOR CODE 0100 SINGLE FAMILY
MAP NUM | MKT AREA 01
NEIGHBORHOOD/LOC 1031.00

AREA TYPE	TOTAL GROSS AREA	PCT OF BASE	YEAR	TOT ADJ AREA	SUBAREA MARKET VALUE
BAS	2,296	100	2005	2,296	447,451
FGR	572	55	2005	315	61,388
FOP	102	30	2005	31	6,042
FOP	174	30	2005	52	10,134
FOP	255	30	2005	76	14,811
FST	24	55	2005	13	2,533
PTO	73	5	2005	4	779
UUS	344	50	2005	172	33,519
TOTALS	3,840			2,959	576,658

MARKET ADJUSTMENTS

TYPE	MDL	EFF. AREA	TOT ADJ PTS	EFF. BASE RATE	REPL. COST NEW	AYB	EYB	ECON	FNCT		NORM	% COND
0500	01	2,959	129.7200	215.34	637,191	2005	2005	0	0	0	9.50	90.50

1 SFR CUST 100% - 2022 Heated Area: 2296 HX Base Yr 2022

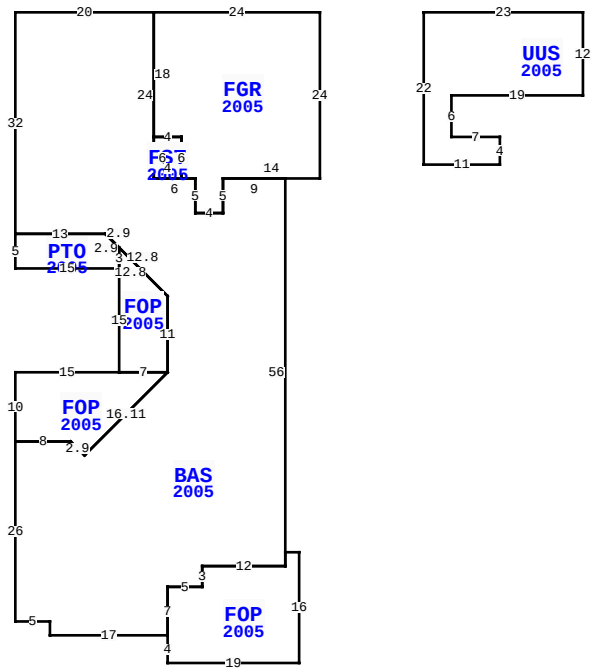

1860 NEIGHBOR ST, FERNANDINA BEACH

BLD DATE		LGL DATE	
XF DATE		LAND DATE	05/08/2025 MLU
INC DATE		AG DATE	

NASSAU COUNTY PROPERTY

PAGE 1 of 1 2

VALUATION SUMMARY

VALUATION BY		STANDARD
Tax Group: 2	Tax Dist:	
BUILDING MARKET VALUE		576,658
TOTAL MARKET OB/XF VALUE		3,112
TOTAL LAND VALUE - MARKET		300,000
TOTAL MARKET VALUE		879,770
SOH/AGL Deduction		188,550
ASSESSED VALUE		691,220
TOTAL EXEMPTION VALUE	HX HB	51,411
BASE TAXABLE VALUE		639,809
TOTAL JUST VALUE		879,770
NCON VALUE		0
INCOME VALUE		
PREVIOUS YEAR MKT VALUE		927,134

PERMIT NUM	DESCRIPTION	AMT	ISSUED
20051506	XFOB	4,000	04/04/2005
20042175	GAS	1,000	11/18/2004
20041633	H/AC	6,000	09/13/2004
20041283	NEW CONSTR	7,000	07/14/2004
20041278	NEW CONSTR	6,000	07/12/2004

SALES DATA

OFF RECORD Number	DATE	TYPE INST	Q U	V I	RSN CD	SALE PRICE
2466/1290	6/01/2021	WD	Q	I	02	665,000
GRANTOR: KNUTH THOMAS D & JANE						
GRANTEE: FORBES EVE & MARK (						
2275/1033	5/10/2019	WD	Q	I	01	530,000
GRANTOR: MAZUREK JOYCE F REV T						
GRANTEE: KNUTH THOMAS D & JA						

BUILDING NOTES

BUILDING DIMENSIONS

FGR=[YR=2005] W24 BAS=[YR=2005] W20 S32 PTO=[YR=2005] S5 E15FOP=[YR=2005] S15 FOP=[YR=2005] W15S10E8 D2 R2 U12 R12 W7$E7N11 U9 L9 R2 D2 S3$N3 U2 L2 W13$ E13 R9 D9 S11 D12 L12 U2 L2 W8 S26 E5 S2E17 FOP=[YR=2005] S4 E19 N16 W2 S2 W12 S3 W5 S7$ N7 E5 N3 E12 N56W9 S5 W4 N5 W6 N24$ S18 FST=[YR=2005] S6 E4 N6 W4$ E4 S6 E2 S5 E4 N5 E14 N24$ PTR=E15 UUS=[YR=2005] E23 S12 W19 S6 E7 S4 W11 N22$ W15$.

EXTRA FEATURES

LN	OB/XF CODE	DESCRIPTION	BLD	CAP	L	W	UNITS	UT	Adj R	ADJ UNIT PRICE	ORIG COND	YEAR ON	YEAR ACTUAL	Q	% COND	OB/XF MKT VALUE	NOTES
1	0500	FP-PRE FAB	0	100	0	0	1.00	UT	3,500.00	3,500.00	100	2005	2005	3	87	3,045	
2	1242	WD DECK A	0	100	8	4	32.00	SF	10.00	10.00	100	2005	2005	3	21	67	

LAND DESCRIPTION

TOTAL OB/XF 3,112

LN	USE CODE	CLS	LAND USE DESCRIPTION	CAP	RD	LOC ZONE	FRONT	DEPTH	TOT LND UTS	UNIT TYPE	DT	DPTH FACT	% COND	TOT ADJ	UNIT PRICE	ADJ UNIT PRICE	LAND VALUE	OTHER ADJUSTMENTS AND NOTES	YEAR	DENSITY	DECL	FRZ	YR	CONSRV
1	000100	C	RES	100		R-2	0.00	0.00	60.00	FF		1.00	1.00	1.00	5,000.00	5,000.00	300,000							

REVIEW DATE 01/01/2023 BY CD Total Acres: 0.00 Total Land Value: 300,000 Market: 0 Agricultural: 0 Common: 300,000 PRINTED 07/09/2026 BY SYS