BLOCK 17 LOT 5
AMELIA PARK PHASE 1 UNIT 7
PB 6/366

ADAMS MICHAEL THOMAS & TAMARA/
1867 PERIMETER PARK RD W
FERNANDINA BEACH, FL 32034

2026

00-00-31-102P-0017-0050

NASSAU COUNTY PROPERTY

BUILDING CHARACTERISTICS

ELEMENT	CD	CONSTRUCTION
Exterior Wall	10	ABOVE AVG 100
Roof Structur	08	IRREGULAR 100
Roof Cover	03	COMP SHNGL 100
Interior Wall	05	DRYWALL 100
Interior Floo	12	HARDWOOD 80
Interior Floo	15	HARDTILE 20
Air Condition	03	CENTRAL 100
Heating Type	04	AIR DUCTED 100
Bedrooms		3 100
Bathrooms		2.5 100
Frame	02	WOOD FRAME 100
Stories	1.5	1.5 100
Units		0 100
Occupancy	00	NONE 100
Quality	06	Quality Level 06
DOR CODE	0100	SINGLE FAMILY
MAP NUM		MKT AREA 01
NEIGHBORHOOD/LOC	1031.00	

AREA TYPE	TOTAL GROSS AREA	PCT OF BASE	YEAR	TOT ADJ AREA	SUBAREA MARKET VALUE
BAS	1,583	100	2006	1,583	298,824
FGR	424	55	2006	233	43,984
FOP	160	30	2006	48	9,061
FOP	160	30	2006	48	9,061
FOP	213	30	2006	64	12,081
FUS	944	100	2006	944	178,199
TOTALS	3,484			2,920	551,210

MARKET ADJUSTMENTS

TYPE	MDL	EFF. AREA	TOT ADJ PTS	EFF. BASE RATE	REPL. COST NEW	AYB	EYB	ECON	FNCT		NORM	% COND
0500	01	2,920	124.9636	207.44	605,725	2006	2006	0	0	0	9.00	91.00

1 SFR CUST 100% - 2021 Heated Area: 2527 HX Base Yr 2021

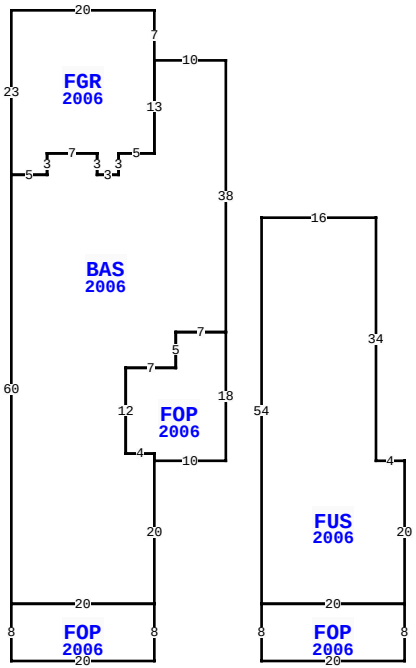

1867 W PERIMETER PARK RD, FERNANDINA BEACH

BLD DATE	01/03/2007	PH	LGL DATE	05/08/2025	MLU
XF DATE			LAND DATE		
INC DATE			AG DATE		

VALUATION SUMMARY

VALUATION BY		STANDARD
Tax Group: 2	Tax Dist:	
BUILDING MARKET VALUE		551,210
TOTAL MARKET OB/XF VALUE		3,080
TOTAL LAND VALUE - MARKET		220,000
TOTAL MARKET VALUE		774,290
SOH/AGL Deduction		213,899
ASSESSED VALUE		560,391
TOTAL EXEMPTION VALUE	HX HB	51,411
BASE TAXABLE VALUE		508,980
TOTAL JUST VALUE		774,290
NCON VALUE		0
INCOME VALUE		
PREVIOUS YEAR MKT VALUE		808,735

PERMIT NUM	DESCRIPTION	AMT	ISSUED
20200670	CO ISSUED	0	09/30/2020
20062374	OTHER	2,000	10/23/2006
20060711	GAS	800	04/06/2006
20060682	H/AC	6,850	04/01/2006
20060450	NEW CONSTR	2,000	03/06/2006
20060339	NEW CONSTR	11,525	02/14/2006

SALES DATA

OFF RECORD Number	DATE	TYPE INST	Q / U	V / I	RSN CD	SALE PRICE
2399/1405	10/09/2020	WD	Q	I	01	617,000
GRANTOR: SISTKO ROBERT J & LYN						
GRANTEE: ADAMS MICHAEL THOMA						
1469/0824	1/04/2007	WD	U	I	21	513,571
GRANTOR: WATSON HOME BUILDERS						
GRANTEE: SISTKO ROBERT J & L						

BUILDING NOTES

BUILDING DIMENSIONS

FOP=[YR=2006] N8 BAS=[YR=2006] N20 FOP=[YR=2006] E10N18W7S5W7S12E4S1$N1W4N12E7 N5E7N38W10 FGR=[YR=2006] N7W20 S23 E 5N3E7S3E3N3E5N13$S13W5S3W3N3W7 S3W5S60E20$W20S8E20$ PTR=E15 FOP=[YR=2006] N8 FUS=[YR=2006] N54 E16 S34 E4 S20 W20$E20S8W20$ W15$.

EXTRA FEATURES

LN	OB/XF CODE	DESCRIPTION	BLD	CAP	L	W	UNITS	UT	Adj R	ADJ UNIT PRICE	ORIG COND	YEAR ON	YEAR ACTUAL	Q	% COND	OB/XF MKT VALUE	NOTES
1	0500	FP-PRE FAB	0	100	0	0	1.00	UT	3,500.00	3,500.00	100	2006	2006	3	88	3,080	

LAND DESCRIPTION

TOTAL OB/XF 3,080

LN	USE CODE	CLS	LAND USE DESCRIPTION	CAP	RD	LOC ZONE	FRONT	DEPTH	TOT LND UTS	UNIT TYPE	DT	DPTH FACT	% COND	TOT ADJ	UNIT PRICE	ADJ UNIT PRICE	LAND VALUE	OTHER ADJUSTMENTS AND NOTES	YEAR	DENSITY	DECL	FRZ	YR	CONSRV
1	000100	C	RES	100		R-2	0.00	0.00	44.00	FF		1.00	1.00	1.00	5,000.00	5,000.00	220,000							

REVIEW DATE 01/01/2023 BY CD Total Acres: 0.00 Total Land Value: 220,000 Market: 0 Agricultural: 0 Common: 220,000 PRINTED 07/09/2026 BY SYS