BLOCK 17 LOT 2
AMELIA PARK PHASE 1 UNIT 7
PB 6/366

BARDEN MARY LISA O QUINN
1855 PERIMETER PARK RD W
FERNANDINA BEACH, FL 32034

2026

00-00-31-102P-0017-0020

BUILDING CHARACTERISTICS

ELEMENT	CD	CONSTRUCTION
Exterior Wall	10	ABOVE AVG 100
Roof Structur	08	IRREGULAR 100
Roof Cover	03	COMP SHNGL 100
Interior Wall	05	DRYWALL 100
Interior Floo	12	HARDWOOD 80
Interior Floo	15	HARDTILE 20
Air Condition	03	CENTRAL 100
Heating Type	04	AIR DUCTED 100
Bedrooms		3 100
Bathrooms		2.5 100
Frame	02	WOOD FRAME 100
Stories	1.5	1.5 100
Units		0 100
Occupancy	00	NONE 100
Quality	06	Quality Level 06
DOR CODE	0100	SINGLE FAMILY
MAP NUM		MKT AREA 01
NEIGHBORHOOD/LOC	1031.00	

AREA TYPE	TOTAL GROSS AREA	PCT OF BASE	YEAR	TOT ADJ AREA	SUBAREA MARKET VALUE
BAS	1,595	100	2006	1,595	301,089
FGR	424	55	2006	233	43,984
FOP	160	30	2006	48	9,061
FOP	160	30	2006	48	9,061
FSP	201	40	2019	80	15,101
FUS	944	100	2006	944	178,199
TOTALS	3,484			2,948	556,495

MARKET ADJUSTMENTS

TYPE	MDL	EFF. AREA	TOT ADJ PTS	EFF. BASE RATE	REPL. COST NEW	AYB	EYB	ECON	FNCT		NORM	% COND
0500	01	2,948	124.9636	207.44	611,533	2006	2006	0	0	0	9.00	91.00

1 SFR CUST 100% - 2023 Heated Area: 2539 HX Base Yr 2023

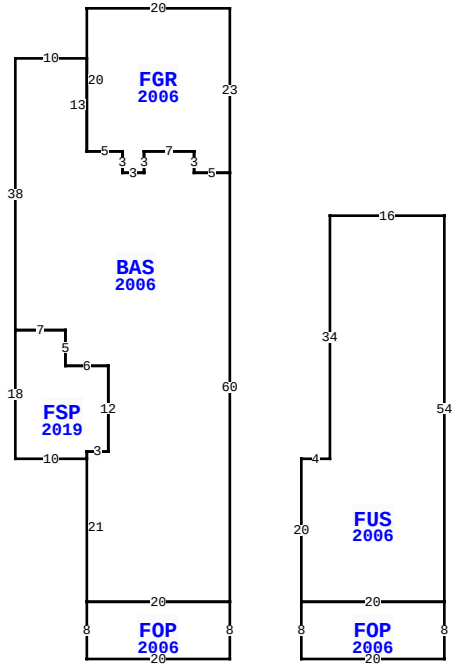

1855 W PERIMETER PARK RD, FERNANDINA BEACH

BLD DATE	07/21/2014 KK	LGL DATE	
XF DATE		LAND DATE	05/08/2025 MLU
INC DATE		AG DATE	

NASSAU COUNTY PROPERTY

PAGE 1 of 1 2

VALUATION SUMMARY

VALUATION BY		STANDARD
Tax Group: 2	Tax Dist:	
BUILDING MARKET VALUE		556,495
TOTAL MARKET OB/XF VALUE		3,080
TOTAL LAND VALUE - MARKET		220,000
TOTAL MARKET VALUE		779,575
SOH/AGL Deduction		324,613
ASSESSED VALUE		454,962
TOTAL EXEMPTION VALUE	HX HB	51,411
BASE TAXABLE VALUE		403,551
TOTAL JUST VALUE		779,575
NCON VALUE		0
INCOME VALUE		
PREVIOUS YEAR MKT VALUE		813,884

PERMIT NUM	DESCRIPTION	AMT	ISSUED
20190123	SCRNENCL	0	06/19/2010
20062348	OTHER	2,000	10/17/2006
20060710	GAS	800	04/06/2006
20060680	H/AC	6,850	04/01/2006
20060451	NEW CONSTR	2,000	03/06/2006
20060337	NEW CONSTR	11,275	02/14/2006

SALES DATA

OFF RECORD Number	DATE	TYPE INST	Q U	V I	RSN CD	SALE PRICE
2865/0150	4/30/2026	WD	Q	I	01	899,000
GRANTOR: BARLOW CYNTHIA R						
GRANTEE: BARDEN MARY LISA O						
2544/1078	3/07/2022	WD	Q	I	01	779,900
GRANTOR: FYFE SARAH & JAMES						
GRANTEE: BARLOW CYNTHIA R						

BUILDING NOTES

BUILDING DIMENSIONS

FOP=[YR=2006] N8 BAS=[YR=2006] N60 FGR=[YR=2006] N23
W20S20E5S3E3N3E7S3 E5$W5N3W7S3W3N3W5N13W10S38 FSP=[YR=2019]
S18E10N1E3N12W6N5W7$E7 S5E6S12W3S21E20$W20S8E20$ PTR= E10
FOP=[YR=2006] N8 FUS=[YR=2006] N20 E4 N34 E16 S54
W20$E20S8W20$ W10$.

EXTRA FEATURES

LN	OB/XF CODE	DESCRIPTION	BLD	CAP	L	W	UNITS	UT	Adj R	ADJ UNIT PRICE	ORIG COND	YEAR ON	YEAR ACTUAL	Q	% COND	OB/XF MKT VALUE	NOTES
2	0500	FP-PRE FAB	0	100	0	0	1.00	UT	3,500.00	3,500.00	100	2006	2006	3	88	3,080	

LAND DESCRIPTION

TOTAL OB/XF 3,080

LN	USE CODE	CLS	LAND USE DESCRIPTION	CAP	RD	LOC ZONE	FRONT	DEPTH	TOT LND UTS	UNIT TYPE	DT	DPTH FACT	% COND	TOT ADJ	UNIT PRICE	ADJ UNIT PRICE	LAND VALUE	OTHER ADJUSTMENTS AND NOTES	YEAR	DENSITY	DECL	FRZ	YR	CONSRV
1	000100	C	RES	100	0003	R-2	0.00	0.00	44.00	FF		1.00	1.00	1.00	5,000.00	5,000.00	220,000							

REVIEW DATE 01/01/2023 BY CD Total Acres: 0.00 Total Land Value: 220,000 Market: 0 Agricultural: 0 Common: 220,000 PRINTED 07/09/2026 BY SYS