BLOCK 8 LOT 9
IN OR 1643/1006
AMELIA PARK PHASE 1 UNIT 4

CRANFORD WALLACE D & LEIGH A
1607 GEDDES LANE
FERNANDINA BEACH, FL 32034

2026

00-00-31-102P-0008-0090

NASSAU COUNTY PROPERTY

BUILDING CHARACTERISTICS

ELEMENT	CD	CONSTRUCTION
Exterior Wall	10	ABOVE AVG 80
Exterior Wall	23	REINF CONC 20
Roof Structur	03	GABLE/HIP 100
Roof Cover	03	COMP SHNGL 100
Interior Wall	05	DRYWALL 100
Interior Floo	14	CARPET 70
Interior Floo	15	HARDTILE 30
Air Condition	03	CENTRAL 100
Heating Type	04	AIR DUCTED 100
Bedrooms		1 100
Bathrooms		2 100
Frame	02	WOOD FRAME 100
Stories	1.	1. 100
Units		0 100
Occupancy	00	NONE 100
Quality	06	Quality Level 06
DOR CODE	0100	SINGLE FAMILY
MAP NUM		MKT AREA 01
NEIGHBORHOOD/LOC	1031.00	

AREA TYPE	TOTAL GROSS AREA	PCT OF BASE	YEAR	TOT ADJ AREA	SUBAREA MARKET VALUE
BAS	1,140	100	2003	1,140	237,342
FDG	304	60	2003	182	37,891
FOP	240	30	2003	72	14,990
STR	12	10	2003	1	208
STR	24	10	2003	2	417
TOTALS	1,720			1,397	290,848

MARKET ADJUSTMENTS

TYPE	MDL	EFF. AREA	TOT ADJ PTS	EFF. BASE RATE	REPL. COST NEW	AYB	EYB	ECON	FNCT		NORM	% COND
0500	01	1,397	140.2908	232.88	325,333	2003	2003	0	0	0	10.60	89.40

1 SFR CUST 100% - 2010 Heated Area: 1140 HX Base Yr 2010

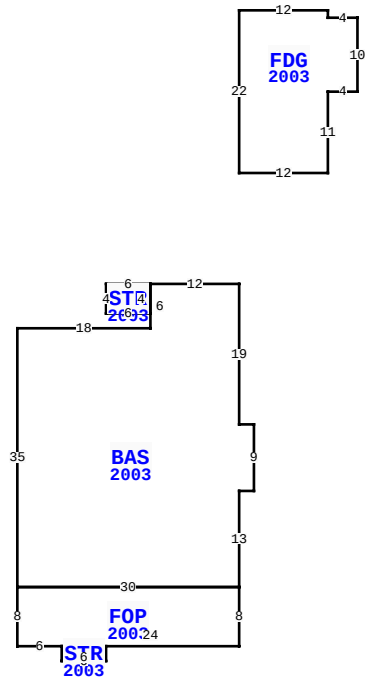

1607 GEDDES LN, FERNANDINA BEACH

BLD DATE		LGL DATE	
XF DATE		LAND DATE	05/08/2025 MLU
INC DATE		AG DATE	

VALUATION SUMMARY

VALUATION BY		STANDARD
Tax Group: 2	Tax Dist:	
BUILDING MARKET VALUE		290,848
TOTAL MARKET OB/XF VALUE		3,023
TOTAL LAND VALUE - MARKET		200,000
TOTAL MARKET VALUE		493,871
SOH/AGL Deduction		271,154
ASSESSED VALUE		222,717
TOTAL EXEMPTION VALUE	HX HB	51,411
BASE TAXABLE VALUE		171,306
TOTAL JUST VALUE		493,871
NCON VALUE		0
INCOME VALUE		
PREVIOUS YEAR MKT VALUE		512,421

PERMIT NUM	DESCRIPTION	AMT	ISSUED
021289	NEW CONSTR	792,780	07/30/2002

SALES DATA

OFF RECORD Number	DATE	TYPE INST	Q U	V I	RSN CD	SALE PRICE
1643/1006	9/30/2009	WD	Q	I	01	233,000
GRANTOR: VIEIRA KAREN						
GRANTEE: CRANFORD WALLACE D						
1643/1004	9/23/2009	QC	U	I	11	100
GRANTOR: FLANAGAN SHERRY						
GRANTEE: VIEIRA KAREN						

BUILDING NOTES

EXTRA FEATURES

LN	OB/XF CODE	DESCRIPTION	BLD	CAP	L	W	UNITS	UT	Adj R	ADJ UNIT PRICE	ORIG COND	YEAR ON	YEAR ACTUAL	Q	% COND	OB/XF MKT VALUE	NOTES
1	0500	FP-PRE FAB	0	100	0	0	1.00	UT	3,500.00	3,500.00	100	2003	2003	3	85	2,975	
4	1242	WD DECK A	0	100	6	4	24.00	SF	10.00	10.00	100	2003	2003	3	20	48	

BUILDING DIMENSIONS

BAS=[YR=2003] W12STR=[YR=2003] W6S4E6N4$ S6 W18 S35 FOP=[YR=2003] S8 E6 STR=[YR=2003] S2E6N2W6$ E24N8 W30$ E30N13E2N9W2 N19$PTR=N15 FDG=[YR=2003] N22 E12 S1 E4 S10 W4 S11 W12$ S15$.

LAND DESCRIPTION

TOTAL OB/XF 3,023

LN	USE CODE	CLS	LAND USE DESCRIPTION	CAP	RD	LOC ZONE	FRONT	DEPTH	TOT LND UTS	UNIT TYPE	DT	DPTH FACT	% COND	TOT ADJ	UNIT PRICE	ADJ UNIT PRICE	LAND VALUE	OTHER ADJUSTMENTS AND NOTES	YEAR	DENSITY	DECL	FRZ	YR	CONSRV
1	000100	C	RES	100		R-2	0.00	0.00	40.00	FF		1.00	1.00	1.00	5,000.00	5,000.00	200,000							

REVIEW DATE 01/01/2023 BY CD Total Acres: 0.00 Total Land Value: 200,000 Market: 0 Agricultural: 0 Common: 200,000 PRINTED 07/09/2026 BY SYS