BLOCK 5 LOT 2F
AMELIA PARK PHASE 1 UNIT 1
PB 6/114-115

1601 PARK AVENUE TRUST/BOHLANDER SANDRA K TRUSTEE
1601 PARK AVE
FERNANDINA BEACH, FL 32034

2026

00-00-31-102P-0005-02F0

NASSAU COUNTY PROPERTY

BUILDING CHARACTERISTICS

ELEMENT	CD	CONSTRUCTION
Exterior Wall	16	WD FR STUC 100
Roof Structur	03	GABLE/HIP 100
Roof Cover	03	COMP SHNGL 100
Interior Wall	05	DRYWALL 100
Interior Floo	12	HARDWOOD 70
Interior Floo	11	CLAY TILE 30
Air Condition	03	CENTRAL 100
Heating Type	04	AIR DUCTED 100
Bedrooms		3 100
Bathrooms		2.5 100
Frame	02	WOOD FRAME 100
Stories	1.5	1.5 100
Units		0 100
Quality	03	Quality Level 03
DOR CODE	0100	SINGLE FAMILY
MAP NUM		MKT AREA 01
NEIGHBORHOOD/LOC	1031.00	

AREA TYPE	TOTAL GROSS AREA	PCT OF BASE	YEAR	TOT ADJ AREA	SUBAREA MARKET VALUE
BAS	1,235	100	2000	1,235	221,928
FDG	420	60	2000	252	45,284
FOP	112	30	2000	34	6,110
FOP	126	30	2000	38	6,829
FUS	717	100	2000	717	128,844
PTO	153	5	2000	8	1,438
TOTALS	2,763			2,284	410,432

MARKET ADJUSTMENTS

TYPE	MDL	EFF. AREA	TOT ADJ PTS	EFF. BASE RATE	REPL. COST NEW	AYB	EYB	ECON	FNCT		NORM	% COND
0320	12	2,284	195.5884	205.37	469,065	2000	2000	0	0	0	12.50	87.50

1 TOWNHOUSE 100% - 2020 Heated Area: 1952 HX Base Yr 2020

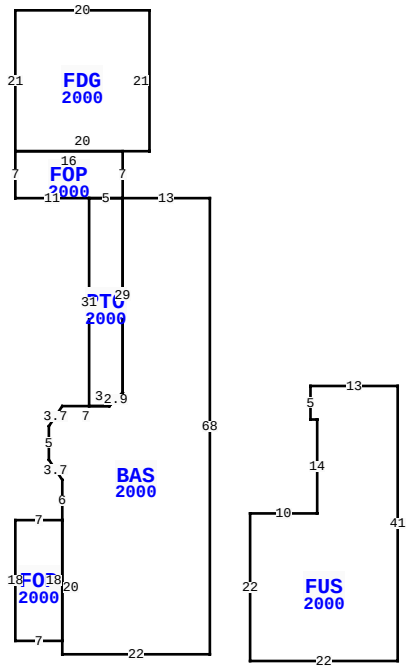

1601 PARK AVE, FERNANDINA BEACH

BLD DATE		LGL DATE	
XF DATE		LAND DATE	05/08/2025 MLU
INC DATE		AG DATE	

VALUATION SUMMARY

VALUATION BY		STANDARD
Tax Group: 2	Tax Dist:	
BUILDING MARKET VALUE		410,432
TOTAL MARKET OB/XF VALUE		3,351
TOTAL LAND VALUE - MARKET		110,000
TOTAL MARKET VALUE		523,783
SOH/AGL Deduction		265,092
ASSESSED VALUE		258,691
TOTAL EXEMPTION VALUE	HX HB	51,411
BASE TAXABLE VALUE		207,280
TOTAL JUST VALUE		523,783
NCON VALUE		0
INCOME VALUE		
PREVIOUS YEAR MKT VALUE		564,286

PERMIT NUM	DESCRIPTION	AMT	ISSUED
990286	NEW CONSTR	150,000	04/26/1999

SALES DATA

OFF RECORD Number	DATE	TYPE INST	Q U	V I	RSN CD	SALE PRICE
2539/0681	2/08/2022	SW	U	I	11	100
GRANTOR: BOHLANDER TERRY M & S						
GRANTEE: 1601 PARK AVENUE TR						
1645/1337	10/27/2009	WD	Q	I	01	370,000
GRANTOR: BUCK SARAH HILL						
GRANTEE: BOHLANDER TERRY M &						

BUILDING NOTES

BUILDING DIMENSIONS

FDG=[YR=2000] W20 S21 FOP=[YR=2000] S7 E11 PTO=[YR=2000] S31E3 U2 R2 N29W5$ E5 BAS=[YR=2000] S29 D2 L2 W7 L2 D3 S5 D3 R2 S6 FOP=[YR=2000] W7 S18 E7 N18 $ S20 E22 N68 W13 $ N7 W16 $ E20 N21 $ PTR= E15S75 FUS=[YR=2000] E10 N14 W1 N5 E13 S41 W22 N22 $W15N75 $.

EXTRA FEATURES

LN	OB/XF CODE	DESCRIPTION	BLD	CAP	L	W	UNITS	UT	Adj R	ADJ UNIT PRICE	ORIG COND	YEAR ON	YEAR ACTUAL	Q	% COND	OB/XF MKT VALUE	NOTES
1	0500	FP-PRE FAB	0	100	0	0	1.00	UT	3,500.00	3,500.00	100	2000	2000	3	81	2,835	
7	1126	CB/STC 8"	0	100	43	2	86.00	SF	8.00	8.00	100	2000	2000	3	75	516	

LAND DESCRIPTION

TOTAL OB/XF 3,351

LN	USE CODE	CLS	LAND USE DESCRIPTION	CAP	RD	LOC ZONE	FRONT	DEPTH	TOT LND UTS	UNIT TYPE	DT	DPTH FACT	% COND	TOT ADJ	UNIT PRICE	ADJ UNIT PRICE	LAND VALUE	OTHER ADJUSTMENTS AND NOTES	YEAR	DENSITY	DECL	FRZ	YR	CONSRV
1	000100	C	RES	100		R-2	0.00	0.00	22.00	FF		1.00	1.00	1.00	5,000.00	5,000.00	110,000							

REVIEW DATE 01/01/2023 BY CD Total Acres: 0.00 Total Land Value: 110,000 Market: 0 Agricultural: 0 Common: 110,000 PRINTED 07/09/2026 BY SYS