LOT 20
OCEAN WALK PB 5/373

TURNER STEVEN MATTHEW & LINDSAY ANNE
4977 SPANISH OAKS CIR
FERNANDINA BEACH, FL 32034

2026

00-00-30-155W-0020-0000

BUILDING CHARACTERISTICS

ELEMENT	CD	CONSTRUCTION
Exterior Wall	10	ABOVE AVG 100
Roof Structur	08	IRREGULAR 100
Roof Cover	03	COMP SHNGL 90
Roof Cover	12	MODULAR MT 10
Interior Wall	05	DRYWALL 100
Interior Floo	12	HARDWOOD 100
Air Condition	03	CENTRAL 100
Heating Type	04	AIR DUCTED 100
Bedrooms		4 100
Bathrooms		3.5 100
Frame	02	WOOD FRAME 100
Stories	1.5	1.5 100
Units		0 100
Occupancy	00	NONE 100
Quality	03	Quality Level 03
DOR CODE	0100	SINGLE FAMILY
MAP NUM		MKT AREA 03
NEIGHBORHOOD/LOC	3033.00	

AREA TYPE	TOTAL GROSS AREA	PCT OF BASE	YEAR	TOT ADJ AREA	SUBAREA MARKET VALUE
BAS	2,899	100	2017	2,899	817,804
FGR	564	55	2017	310	87,450
FOP	40	30	2017	12	3,385
FOP	189	30	2017	57	16,080
FOP	280	30	2017	84	23,697
FST	77	55	2017	42	11,848
FUS	441	100	2017	441	124,406
STP	6	10	2017	1	282
STR	52	10	2017	5	1,411
TOTALS	4,548			3,851	1,086,361

MARKET ADJUSTMENTS

TYPE	MDL	EFF. AREA	TOT ADJ PTS	EFF. BASE RATE	REPL. COST NEW	AYB	EYB	ECON	FNCT		NORM	% COND
0500	12	3,851	176.1030	292.33	1,125,763	2017	2017	0	0	0	3.50	96.50

1 SFR CUST 100% - 2024 Heated Area: 3340 HX Base Yr 2024

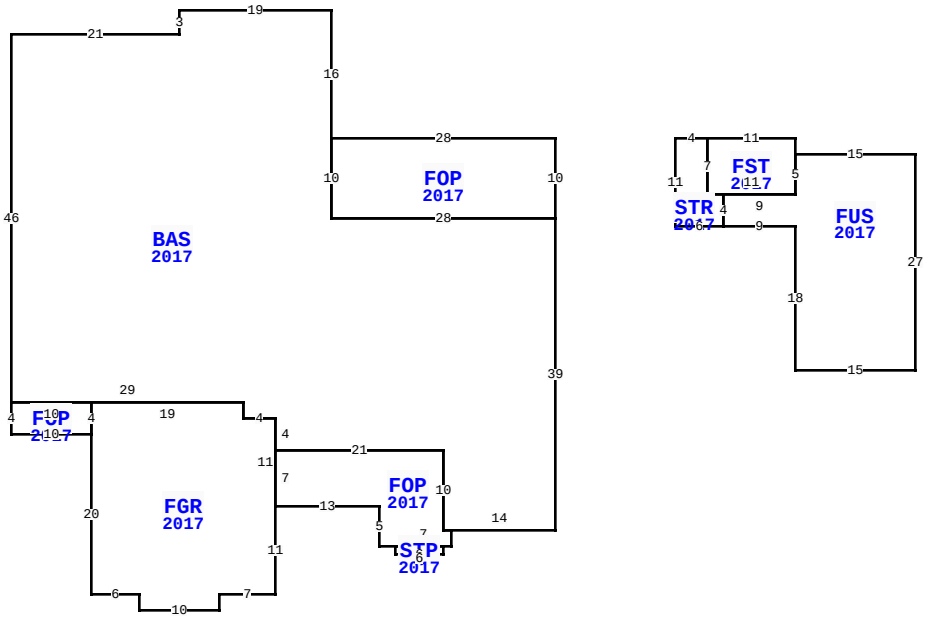

4977 SPANISH OAKS CIR, FERNANDINA BEACH

BLD DATE		LGL DATE	
XF DATE		LAND DATE	04/09/2026 MLU
INC DATE		AG DATE	

NASSAU COUNTY PROPERTY

PAGE 1 of 1 8

VALUATION SUMMARY

VALUATION BY		STANDARD
Tax Group: 8	Tax Dist:	
BUILDING MARKET VALUE		1,086,361
TOTAL MARKET OB/XF VALUE		61,788
TOTAL LAND VALUE - MARKET		360,000
TOTAL MARKET VALUE		1,508,149
SOH/AGL Deduction		397,477
ASSESSED VALUE		1,110,672
TOTAL EXEMPTION VALUE	HX HB	51,411
BASE TAXABLE VALUE		1,059,261
TOTAL JUST VALUE		1,508,149
NCON VALUE		0
INCOME VALUE		
PREVIOUS YEAR MKT VALUE		1,450,000

PERMIT NUM	DESCRIPTION	AMT	ISSUED
1709680	CO ISSUED	0	11/01/2017
17003155	SWIM POOL	30,000	04/11/2017
B1633526	NEW CONSTR	411,007	12/06/2016
R1213220	REMODEL	8,000	11/01/2012

SALES DATA

OFF RECORD Number	DATE	TYPE INST	Q / U	V / I	RSN CD	SALE PRICE
2685/1330	12/20/2023	WD	Q	I	01	1,527,500
GRANTOR: NORRIS PATRICIA ANNE						
GRANTEE: TURNER STEVEN MATTH						
2497/0739	9/07/2021	SW	U	I	11	100
GRANTOR: NORRIS PATRICIA ANNE						
GRANTEE: NORRIS PATRICIA A &						

BUILDING NOTES

BUILDING DIMENSIONS

FOP=[YR=2017] W28 BAS=[YR=2017] N16 W19 S3 W21 S46
FOP=[YR=2017] S4 E10 FGR=[YR=2017] S20 E6 S2 E10 N2 E7 N11
FOP=[YR=2017] E13 S5 E2 STP=[YR=2017] S1 E6 N1 W6$ E7 N2 W1
N10 W21 S7$ N11 W4 N2 W19 S4$ N4 W10$ E29 S2 E4 S4 E21 S10
E14 N39 W28 N10$ S10 E28 N10$ PTR=E15 STR=[YR=2017] E4
FST=[YR=2017] E11 S2 FUS=[YR=2017] E15 S27 W15 N18 W9 N4 E9
N5$ S5 W11 N7$ S7 E2 S4 W6 N11$ W15$.

EXTRA FEATURES

LN	OB/XF CODE	DESCRIPTION	BLD	CAP	L	W	UNITS	UT	Adj R	ADJ UNIT PRICE	ORIG COND	YEAR ON	YEAR ACTUAL	Q	% COND	OB/XF MKT VALUE	NOTES
1	0504	FP-ELECTRI	0	100	0	0	1.00	UT	2,000.00	2,000.00	100	2017	2017	3	97	1,940	
4	0911	SCRN RM A	0	100	0	0	980.00	SF	18.00	18.00	100	2017	2017	3	70	12,348	
5	0860	POOL/SPA	0	100	0	0	1.00	UT	50,000.00	50,000.00	100	2017	2017	04	95	47,500	

LAND DESCRIPTION

TOTAL OB/XF 61,788

LN	USE CODE	CLS	LAND USE DESCRIPTION	CAP	RD	LOC ZONE	FRONT	DEPTH	TOT LND UTS	UNIT TYPE	DT	DPTH FACT	% COND	TOT ADJ	UNIT PRICE	ADJ UNIT PRICE	LAND VALUE	OTHER ADJUSTMENTS AND NOTES	YEAR	DENSITY	DECL	FRZ	YR	CONSRV
1	000100	C	RES	100		RSF-1	0.00	0.00	1.00	LT		1.00	1.00	1.00	360,000.00	360,000.00	360,000							

REVIEW DATE 03/21/2024 BY KBA Total Acres: 0.00 Total Land Value: 360,000 Market: 0 Agricultural: 0 Common: 360,000 PRINTED 07/09/2026 BY SYS