LOT 2
IN OR 791/1941
OCEAN WALK PB 5/373

MOORE DWIGHT A JR
4905 SPANISH OAKS CIRCLE
FERNANDINA BEACH, FL 32034

**2026**

**00-00-30-155W-0002-0000**

## BUILDING CHARACTERISTICS

| ELEMENT | CD | CONSTRUCTION |
|---|---|---|
| Exterior Wall | 05 | AVERAGE 90 |
| Exterior Wall | 14 | WD SHINGLE 10 |
| Roof Structur | 03 | GABLE/HIP 100 |
| Roof Cover | 03 | COMP SHNGL 100 |
| Interior Wall | 05 | DRYWALL 100 |
| Interior Floo | 14 | CARPET 70 |
| Interior Floo | 11 | CLAY TILE 30 |
| Air Condition | 03 | CENTRAL 100 |
| Heating Type | 04 | AIR DUCTED 100 |
| Bedrooms | | 3 100 |
| Bathrooms | | 2 100 |
| Frame | 02 | WOOD FRAME 100 |
| Stories | 1. | 1. 100 |
| Units | | 0 100 |
| Quality | 03 | Quality Level 03 |
| DOR CODE | 0100 | SINGLE FAMILY |
| MAP NUM | | MKT AREA 03 |
| NEIGHBORHOOD/LOC | 3033.00 | |

| AREA TYPE | TOTAL GROSS AREA | PCT OF BASE | YEAR | TOT ADJ AREA | SUBAREA MARKET VALUE |
|---|---|---|---|---|---|
| BAS | 1,847 | 100 | 1994 | 1,847 | 354,318 |
| FEP | 168 | 80 | 2002 | 134 | 25,706 |
| FGR | 484 | 55 | 1994 | 266 | 51,028 |
| FOP | 126 | 30 | 1994 | 38 | 7,290 |
| TOTALS | 2,625 | | | 2,285 | 438,341 |

## MARKET ADJUSTMENTS

| TYPE | MDL | EFF. AREA | TOT ADJ PTS | EFF. BASE RATE | REPL. COST NEW | AYB | EYB | ECON | FNCT | | NORM | % COND |
|---|---|---|---|---|---|---|---|---|---|---|---|---|
| 0500 | 11 | 2,285 | 136.0348 | 225.82 | 515,999 | 1994 | 1994 | 0 | 0 | 0 | 15.05 | 84.95 |

1 SFR CUST 100% - 1998 Heated Area: 1847 HX Base Yr 1998

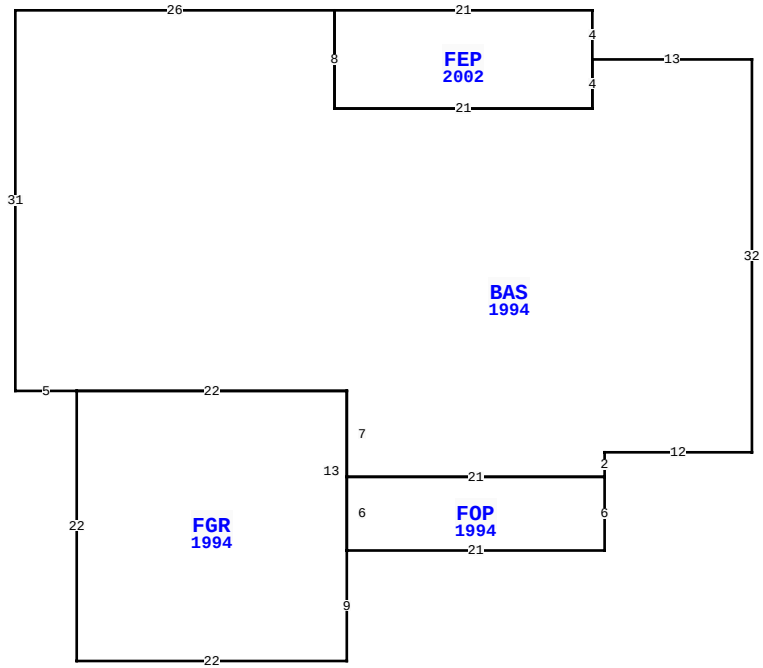


| | | | |
|---|---|---|---|
| BLD DATE | 03/03/2023 NW | LGL DATE | |
| XF DATE | | LAND DATE | 04/09/2026 MLU |
| INC DATE | | AG DATE | |

4905 SPANISH OAKS CIR, FERNANDINA BEACH

## NASSAU COUNTY PROPERTY

PAGE 1 of 1 8

### VALUATION SUMMARY

| | | |
|---|---|---|
| VALUATION BY | | STANDARD |
| Tax Group: 8 | Tax Dist: | |
| BUILDING MARKET VALUE | | 438,341 |
| TOTAL MARKET OB/XF VALUE | | 1,440 |
| TOTAL LAND VALUE - MARKET | | 360,000 |
| TOTAL MARKET VALUE | | 799,781 |
| SOH/AGL Deduction | | 550,633 |
| ASSESSED VALUE | | 249,148 |
| TOTAL EXEMPTION VALUE | HX HB | 51,411 |
| BASE TAXABLE VALUE | | 197,737 |
| TOTAL JUST VALUE | | 799,781 |
| NCON VALUE | | 0 |
| INCOME VALUE | | |
| PREVIOUS YEAR MKT VALUE | | 784,097 |

| PERMIT NUM | DESCRIPTION | AMT | ISSUED |
|---|---|---|---|
| 22013136 | REMODEL | 15,825 | 08/26/2022 |
| R1213234 | REMODEL | 8,200 | 11/01/2012 |
| V000070 | REPAIR/RRF | 0 | 02/01/2000 |
| B94-0550 | NEW CONSTR | 114,540 | 10/01/1993 |

## SALES DATA

| OFF RECORD Number | DATE | TYPE INST | Q / U | V / I | RSN CD | SALE PRICE |
|---|---|---|---|---|---|---|
| 0791/1941 | 5/01/1997 | WD | Q | I | | 174,900 |
| GRANTOR: JANICAK DAN C & KATHR | | | | | | |
| GRANTEE: MOORE DWIGHT A JR | | | | | | |
| 0751/1889 | 2/20/1996 | QC | Q | I | 01 | 100 |
| GRANTOR: JANICAK DAN C | | | | | | |
| GRANTEE: JANICAK DAN & KATHR | | | | | | |

## BUILDING NOTES

## BUILDING DIMENSIONS

BAS=[YR=1994;ORIG=0,0] W13 S4 W21 N8 W26 S31 E5 E22 S7 E21 N2 E12 N32 $
FGR=[YR=1994;ORIG=-55,27] S22 E22 N9 N13 W22 $
FEP=[YR=2002;ORIG=-13,0] N4 W21 S8 E21 N4 $
FOP=[YR=1994;ORIG=-33,40] E21 N6 W21 S6 $
.

## EXTRA FEATURES

| LN | OB/XF CODE | DESCRIPTION | BLD | CAP | L | W | UNITS | UT | Adj R | ADJ UNIT PRICE | ORIG COND | YEAR ON | YEAR ACTUAL | Q | % COND | OB/XF MKT VALUE | NOTES |
|---|---|---|---|---|---|---|---|---|---|---|---|---|---|---|---|---|---|
| 1 | 0504 | FP-ELECTRI | 0 | 100 | 0 | 0 | 1.00 | UT | 2,000.00 | 2,000.00 | 100 | 1994 | 1994 | 3 | 72 | 1,440 | |

## LAND DESCRIPTION

TOTAL OB/XF 1,440

| LN | USE CODE | CLS | LAND USE DESCRIPTION | CAP | RD | LOC ZONE | FRONT | DEPTH | TOT LND UTS | UNIT TYPE | DT | DPTH FACT | % COND | TOT ADJ | UNIT PRICE | ADJ UNIT PRICE | LAND VALUE | OTHER ADJUSTMENTS AND NOTES | YEAR | DENSITY | DECL | FRZ | YR | CONSRV |
|---|---|---|---|---|---|---|---|---|---|---|---|---|---|---|---|---|---|---|---|---|---|---|---|---|
| 1 | 000100 | C | RES | 100 | | RSF-1 | 0.00 | 0.00 | 1.00 | LT | | 1.00 | 1.00 | 1.00 | 360,000.00 | 360,000.00 | 360,000 | | | | | | | |

REVIEW DATE 03/15/2023 BY DJ Total Acres: 0.00 Total Land Value: 360,000 Market: 0 Agricultural: 0 Common: 360,000 PRINTED 07/09/2026 BY SYS