PT OF LOT 54
IN OR 2108/970
SUB PT OF SEC 4 PB 0/59

DAVID MENZ INVESTMENTS LLC
2742 S 8TH ST
FERNANDINA BEACH, FL 32034

2026

00-00-30-0740-0054-0020

BUILDING CHARACTERISTICS

ELEMENT	CD	CONSTRUCTION
Exterior Wall	15	CONC BLOCK 70
Exterior Wall	05	AVERAGE 30
Roof Structur	04	WOOD TRUSS 100
Roof Cover	03	COMP SHNGL 100
Interior Wall	06	CUST PANEL 100
Interior Floo	14	CARPET 50
Interior Floo	15	HARDTILE 50
Ceiling	02	F.NOT SUS 100
Air Condition	03	CENTRAL 100
Heating Type	04	AIR DUCTED 100
Fixtures		16 100
Frame	03	MASONRY 100
Story Height		9 100
RMS		4 100
Stories	1.	1. 100
Units		0 100
BUD8 Adjustme	05	DIST 1A 100
Occupancy	OO	OWNER OCC 100
Quality	03	Quality Level 03
DOR CODE	1100	STORES, 1 STORY
MAP NUM		MKT AREA 02
NEIGHBORHOOD/LOC	2002.00	

AREA TYPE	TOTAL GROSS AREA	PCT OF BASE	YEAR	TOT ADJ AREA	SUBAREA MARKET VALUE
BAS	2,791	100	1993	2,791	92,471
BAS	110	100	1994	110	3,645
BAS	180	100	1994	180	5,964
BAS	1,245	100	1994	1,245	41,249
BAS	102	100	2007	102	3,379
BAS	135	100	2007	135	4,473
CAN	50	30	1994	15	497
CAN	210	30	1994	63	2,087
CAN	265	30	1994	80	2,651
CAN	25	30	2008	8	265
TOTALS	5,363			4,827	159,928

MARKET ADJUSTMENTS

TYPE	MDL	EFF. AREA	TOT ADJ PTS	EFF. BASE RATE	REPL. COST NEW	AYB	EYB	ECON	FNCT	AP	NORM	% COND
1101	04	4,827	111.9348	165.66	799,641	1984	1984	0	0	30	50.00	20.00

1 RETAILSTOR 0% - 0 Heated Area: 4563 HX Base Yr

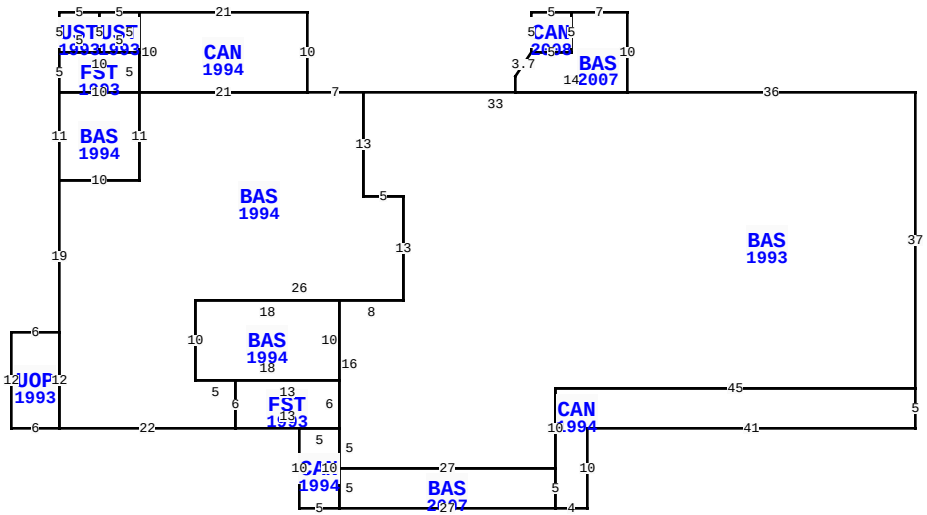

** This building has 15 Sub-Areas

2742 S 8TH ST, FERNANDINA BEACH

BLD DATE	06/14/2021	KK	LGL DATE		
XF DATE	06/14/2021	KK	LAND DATE	05/08/2026	DC
INC DATE			AG DATE		

NASSAU COUNTY PROPERTY

PAGE 1 of 2 8

VALUATION SUMMARY

VALUATION BY	STANDARD
Tax Group: 8	Tax Dist:
BUILDING MARKET VALUE	159,928
TOTAL MARKET OB/XF VALUE	60,482
TOTAL LAND VALUE - MARKET	1,244,475
TOTAL MARKET VALUE	1,464,885
SOH/AGL Deduction	283,187
ASSESSED VALUE	1,181,698
TOTAL EXEMPTION VALUE	0
BASE TAXABLE VALUE	1,181,698
TOTAL JUST VALUE	1,464,885
NCON VALUE	0
INCOME VALUE	
PREVIOUS YEAR MKT VALUE	1,374,060

PERMIT NUM	DESCRIPTION	AMT	ISSUED
22010516	CARPORTS	59,832	01/27/2023
22010008	REPAIR/RRF	30,000	10/28/2022
B0719880	REMODEL	0	01/01/2007
C19880	CO ISSUED	0	01/01/2007
E985288	NEW CONSTR	3,000	10/01/1998
3849	H/AC	5,700	07/10/1991

SALES DATA

OFF RECORD Number	DATE	TYPE INST	Q / U	V / I	RSN CD	SALE PRICE
2108/0970	3/22/2017	WD	Q	I	01	750,000
GRANTOR: BG INVESTMENTS OF AME						
GRANTEE: DAVID MENZ INVESTME						
2012/0114	10/30/2015	SW	U	I	12	405,000
GRANTOR: FIRST COAST COMMUNITY						
GRANTEE: BG INVESTMENTS OF A						

BUILDING NOTES

BUILDING DIMENSIONS

BAS=[YR=1993] W36BAS=[YR=2007] N10W7 CAN=[YR=2008] W5S5E5N5$S5W5 D3 L2 S2 E14$W33 BAS=[YR=1994] W7 CAN=[YR=1994] N10 W21 UST=[YR=1993] W5 UST=[YR=1993] W5S5E5 N5$S5E5N5$S10E21$ W21FST=[YR=1993] N5W10S5E10$ BAS=[YR=1994] W10S11E10 N11$S11W10S19UOP=[YR=1993] W6S12E6 N12$S12E22N6W5 N10E26N13W5N13$ S13E5S13W8 BAS=[YR=1994] W18S10E18 FST=[YR=1993] W13S6E13N6$N10$S16 CAN=[YR=1994] W5S10E5N10$S5BAS=[YR=2007] S5E27N5W27$E27CAN=[YR=1994] S5E4 N10 E41N5W45 S10$N10 E45N37$.

EXTRA FEATURES

LN	OB/XF CODE	DESCRIPTION	BLD	CAP	L	W	UNITS	UT	Adj R	ADJ UNIT PRICE	ORIG COND	YEAR ON	YEAR ACTUAL	Q	% COND	OB/XF MKT VALUE	NOTES
1	0972	ST LGHT UN	0	0	0	0	2.00	UT	2,530.00	2,530.00	100	1984	1984	3	20	1,012	
2	0803	ASPHALT C	0	0	0	0	28,799.00	SF	2.00	2.00	100	1984	1984	3	50	28,799	
3	4950	BOLLARD	0	0	0	0	2.00	UT	100.00	100.00	100	1984	1984	3	100	200	
4	0464	FNC GT 10'	0	0	0	0	2.00	UT	437.50	437.50	100	2020	2020	3	94	823	
5	0463	FENCE GATE	0	0	0	0	1.00	UT	300.00	300.00	100	1984	1984	3	20	60	
6	0402	CONC BUMPE	0	0	0	0	19.00	UT	25.00	25.00	100	1984	1984	3	51.5	245	
7	0975	ST LT/ARM	0	0	0	0	2.00	UT	500.00	500.00	100	2000	2000	3	45	450	
8	0446	BOX FNC 6'	0	0	0	0	449.00	LF	20.00	20.00	100	2018	2018	3	74	6,645	
9	0446	BOX FNC 6'	0	0	0	0	78.00	LF	20.00	20.00	100	2018	2018	3	74	1,154	
10	0463	FENCE GATE	0	0	0	0	2.00	UT	300.00	300.00	100	2018	2018	3	90	540	

TOTAL OB/XF 39,928

LAND DESCRIPTION

LN	USE CODE	CLS	LAND USE DESCRIPTION	CAP	RD	LOC ZONE	FRONT	DEPTH	TOT LND UTS	UNIT TYPE	DT	DPTH FACT	% COND	TOT ADJ	UNIT PRICE	ADJ UNIT PRICE	LAND VALUE	OTHER ADJUSTMENTS AND NOTES	YEAR	DENSITY	DECL	FRZ	YR	CONSRV
1	001100	C	STORE 1FLR	0	0004	CG	0.00	0.00	82,965.00	SF		1.00	1.00	1.00	15.00	15.00	1,244,475							

REVIEW DATE 01/01/2023 BY CD Total Acres: 0.00 Total Land Value: 1,244,475 Market: 0 Agricultural: 0 Common: 1,244,475 PRINTED 07/09/2026 BY SYS

PT OF LOT 54
IN OR 2108/970
SUB PT OF SEC 4 PB 0/59

DAVID MENZ INVESTMENTS LLC
2742 S 8TH ST
FERNANDINA BEACH, FL 32034

2026

00-00-30-0740-0054-0020

NASSAU COUNTY PROPERTY

BUILDING CHARACTERISTICS

ELEMENT	CD	CONSTRUCTION

DOR CODE	1100	STORES, 1 STORY	
MAP NUM		MKT AREA	02
NEIGHBORHOOD/LOC	2002.00		

AREA TYPE	TOTAL GROSS AREA	PCT OF BASE	YEAR	TOT ADJ AREA	SUBAREA MARKET VALUE
TOTALS					

MARKET ADJUSTMENTS

TYPE	MDL	EFF. AREA	TOT ADJ PTS	EFF. BASE RATE	REPL. COST NEW	AYB	EYB	ECON	FNCT		NORM	% COND

VALUATION SUMMARY

VALUATION BY	STANDARD
Tax Group: 8	Tax Dist:
BUILDING MARKET VALUE	159,928
TOTAL MARKET OB/XF VALUE	60,482
TOTAL LAND VALUE - MARKET	1,244,475
TOTAL MARKET VALUE	1,464,885
SOH/AGL Deduction	283,187
ASSESSED VALUE	1,181,698
TOTAL EXEMPTION VALUE	0
BASE TAXABLE VALUE	1,181,698
TOTAL JUST VALUE	1,464,885
NCON VALUE	0
INCOME VALUE	
PREVIOUS YEAR MKT VALUE	1,374,060

PERMIT NUM	DESCRIPTION	AMT	ISSUED

SALES DATA

OFF RECORD Number	DATE	TYPE INST	Q / U	V / I	RSN CD	SALE PRICE
2108/0970	3/22/2017	WD	Q	I	01	750,000
GRANTOR: BG INVESTMENTS OF AME						
GRANTEE: DAVID MENZ INVESTME						
2012/0114	10/30/2015	SW	U	I	12	405,000
GRANTOR: FIRST COAST COMMUNITY						
GRANTEE: BG INVESTMENTS OF A						

BLD DATE	06/14/2021	KK	LGL DATE	
XF DATE	06/14/2021	KK	LAND DATE	05/08/2026 DC
INC DATE			AG DATE	

BUILDING NOTES

BUILDING DIMENSIONS

EXTRA FEATURES

LN	OB/XF CODE	DESCRIPTION	BLD	CAP	L	W	UNITS	UT	Adj R	ADJ UNIT PRICE	ORIG COND	YEAR ON	YEAR ACTUAL	Q	% COND	OB/XF MKT VALUE	NOTES
11	0464	FNC GT 10'	0	0	0	0	2.00	UT	437.50	437.50	100	2018	2018	3	90	788	
12	0466	FNC GT 20'	0	0	0	0	2.00	UT	750.00	750.00	100	2018	2018	3	90	1,350	
13	0424	CL FNC 6'	0	0	0	0	24.00	LF	20.00	20.00	100	1990	1990	3	25	120	
14	0424	CL FNC 6'	0	0	0	0	69.00	LF	20.00	20.00	100	1990	1990	3	25	345	
15	0810	CONCRETE A	0	0	24	8	192.00	SF	6.50	6.50	100	2019	2019	3	97	1,211	
16	0351	CARPORT MT	1	0	30	30	900.00	SF	10.00	10.00	100	2024	2023		93	8,370	
17	0351	CARPORT MT	1	0	30	30	900.00	SF	10.00	10.00	100	2024	2023		93	8,370	

LAND DESCRIPTION

TOTAL OB/XF 20,554

LN	USE CODE	CLS	LAND USE DESCRIPTION	CAP	RD	LOC ZONE	FRONT	DEPTH	TOT LND UTS	UNIT TYPE	DT	DPTH FACT	% COND	TOT ADJ	UNIT PRICE	ADJ UNIT PRICE	LAND VALUE	OTHER ADJUSTMENTS AND NOTES	YEAR	DENSITY	DECL	FRZ	YR	CONSRV

REVIEW DATE 01/01/2023 BY CD Total Acres: 0.00 Total Land Value: 1,244,475 Market: 0 Agricultural: 0 Common: 1,244,475 PRINTED 07/09/2026 BY SYS