LOT 1 & E60 FT OF LOT 2
IN OR 1835/1592
ST PATRICKS COVE PB 3/26

LANCASTER REGINA M/LANCASTER GAYLE MARK
2423 CLINCH DR
FERNANDINA BEACH, FL 32034

2026

00-00-30-0660-0001-0010

NASSAU COUNTY PROPERTY

BUILDING CHARACTERISTICS

ELEMENT	CD	CONSTRUCTION
Exterior Wall	19	COMMON BRK 100
Roof Structur	03	GABLE/HIP 100
Roof Cover	03	COMP SHNGL 100
Interior Wall	05	DRYWALL 100
Interior Floo	09	PINE WOOD 100
Air Condition	03	CENTRAL 100
Heating Type	04	AIR DUCTED 100
Bedrooms		3 100
Bathrooms		3 100
Frame	02	WOOD FRAME 100
Stories	2.	2. 100
Units		0 100
BUD8 Adjustme	05	DIST 1A 100
Occupancy	00	NONE 100
Quality	03	Quality Level 03

DOR CODE 0100 SINGLE FAMILY
MAP NUM | MKT AREA 02
NEIGHBORHOOD/LOC 2019.00

AREA TYPE	TOTAL GROSS AREA	PCT OF BASE	YEAR	TOT ADJ AREA	SUBAREA MARKET VALUE
BAS	2,091	100	1993	2,091	170,477
DCK	582	10	2007	58	4,729
FGR	529	55	1993	291	23,725
FOP	60	30	2007	18	1,467
FST	138	55	1993	76	6,196
FUS	269	100	1993	269	21,931
SFB	150	80	2007	120	9,783
TOTALS	3,819			2,923	238,309

MARKET ADJUSTMENTS

TYPE	MDL	EFF. AREA	TOT ADJ PTS	EFF. BASE RATE	REPL. COST NEW	AYB	EYB	ECON	FNCT		NORM	% COND
0100	01	2,923	110.9200	116.47	340,442	1978	1985	0	0	0	30.00	70.00

2 SINGLE FAM 100% - 2013 Heated Area: 2480 HX Base Yr 2013

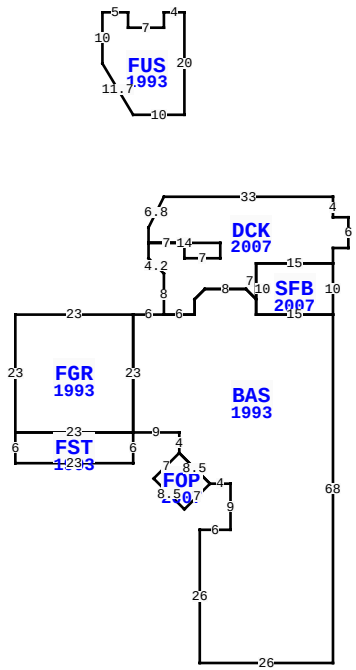

2423 CLINCH DR, FERNANDINA BEACH

BLD DATE		LGL DATE	
XF DATE		LAND DATE	04/24/2026 MLU
INC DATE		AG DATE	

NASSAU COUNTY PROPERTY — VALUATION SUMMARY

VALUATION BY		STANDARD
Tax Group: 8	Tax Dist:	
BUILDING MARKET VALUE		238,309
TOTAL MARKET OB/XF VALUE		0
TOTAL LAND VALUE - MARKET		230,000
TOTAL MARKET VALUE		468,309
SOH/AGL Deduction		248,118
ASSESSED VALUE		220,191
TOTAL EXEMPTION VALUE	HX HB	51,411
BASE TAXABLE VALUE		168,780
TOTAL JUST VALUE		468,309
NCON VALUE		0
INCOME VALUE		
PREVIOUS YEAR MKT VALUE		383,685

PERMIT NUM	DESCRIPTION	AMT	ISSUED
20218582	REMODEL	75,000	08/01/2021

SALES DATA

OFF RECORD Number	DATE	TYPE INST	Q U	V I	RSN CD	SALE PRICE
1881/1664	9/27/2013	QC	U	I	11	100
GRANTOR: LANCASTER JEFFERY TOD						
GRANTEE: LANCASTER GAYLE MAR						
1898/0590	3/15/2013	QC	U	I	11	100
GRANTOR: LANCASTER JEFFREY TOD						
GRANTEE: LANCASTER GAYLE MAR						

BUILDING NOTES

BUILDING DIMENSIONS

DCK=[YR=2007] W7 S3 D3 R3 S8 BAS=[YR=1993] W6
FGR=[YR=1993] W23 S23 FST=[YR=1993] S6 E23 N6 W23 $ E23 N23
$ S23 E9 S4FOP=[YR=2007] L5 D5 D6 R6 R5 U5 U6 L6 $ R6
D6 E4 S9 W6 S26 E26 N68 SFB=[YR=2007] N10 W15 S10 E15 $ W15
N3 L2 U2 W8 D2 L2 S3 W6 $ E6 N3 R2 U2 E8 D2 R2 N7 E15
N3 E3 N6 W3 N4 W33 L3 D6 S3 E14 S3 W7 N3 $ PTR= N25
FUS=[YR=1993] N20 W4 S3 W7 N3 W5 S10 D10 R6 E10 $ S25 $.

EXTRA FEATURES

LN	OB/XF CODE	DESCRIPTION	BLD	CAP	L	W	UNITS	UT	Adj R	ADJ UNIT PRICE	ORIG COND	YEAR ON	YEAR ACTUAL	Q	% COND	OB/XF MKT VALUE	NOTES

LAND DESCRIPTION

TOTAL OB/XF 0

LN	USE CODE	CLS	LAND USE DESCRIPTION	CAP	RD	LOC ZONE	FRONT	DEPTH	TOT LND UTS	UNIT TYPE	DT	DPTH FACT	% COND	TOT ADJ	UNIT PRICE	ADJ UNIT PRICE	LAND VALUE	OTHER ADJUSTMENTS AND NOTES	YEAR	DENSITY	DECL	FRZ	YR	CONSRV
1	000100	C	RES	100		RSF-	115.00	160.00	115.00	FF		1.00	1.00	1.00	2,000.00	2,000.00	230,000							

REVIEW DATE 01/01/2023 BY CD Total Acres: 0.00 Total Land Value: 230,000 Market: 0 Agricultural: 0 Common: 230,000 PRINTED 07/09/2026 BY SYS