LOT 11
ESMT AGREEMENT PT OR 766/1726
THE SANCTUARY OF AMELIA ISLAND

SNOW JOHN QUALIFIED PERSONAL RESIDENCE TRUST/SNOW
1800 BAYBERRY COURT SUITE 101
RICHMOND, VA 23226

2026

00-00-30-0603-0011-0000

NASSAU COUNTY PROPERTY

BUILDING CHARACTERISTICS

ELEMENT	CD	CONSTRUCTION
Exterior Wall	14	WD SHINGLE 70
Exterior Wall	17	CB STUCCO 30
Roof Structur	08	IRREGULAR 100
Roof Cover	07	CONC TILE 100
Interior Wall	05	DRYWALL 100
Interior Floo	12	HARDWOOD 80
Interior Floo	14	CARPET 20
Air Condition	03	CENTRAL 100
Heating Type	04	AIR DUCTED 100
Bedrooms		4 100
Bathrooms		4.5 100
Frame	02	WOOD FRAME 100
Stories	2.	2. 100
Units		0 100
Quality	05	Quality Level 05
DOR CODE	0100	SINGLE FAMILY
MAP NUM		MKT AREA 10
NEIGHBORHOOD/LOC	10005.00	

AREA TYPE	TOTAL GROSS AREA	PCT OF BASE	YEAR	TOT ADJ AREA	SUBAREA MARKET VALUE
BAS	3,456	100	2003	3,456	2,071,179
FGR	1,328	55	2003	730	437,488
FOP	100	30	2003	30	17,979
FOP	345	30	2003	104	62,327
FOP	345	30	2003	104	62,327
FOP	719	30	2003	216	129,449
FOP	852	30	2003	256	153,421
FSP	315	40	2003	126	75,512
FUS	3,996	100	2003	3,996	2,394,800
UOP	30	20	2003	6	3,596
TOTALS	12,116			9,156	5,483,589

MARKET ADJUSTMENTS

TYPE	MDL	EFF. AREA	TOT ADJ PTS	EFF. BASE RATE	REPL. COST NEW	AYB	EYB	ECON	FNCT		NORM	% COND
0500	22	9,150	405.6474	673.37	6,161,336	2003	2003	0	0	0	11.00	89.00

1 SFR CUST 100% - 2019 Heated Area: 7452 HX Base Yr 2019

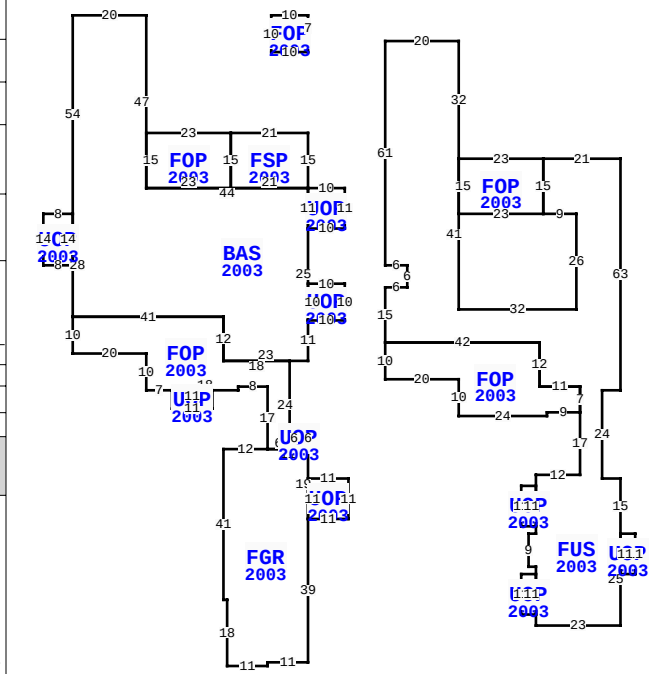

** This building has 18 Sub-Areas

8300 SANCTUARY LN, FERNANDINA BEACH

BLD DATE		LGL DATE	
XF DATE		LAND DATE	05/08/2025 MLU
INC DATE		AG DATE	

NASSAU COUNTY PROPERTY — VALUATION SUMMARY

VALUATION BY		STANDARD
Tax Group: 5	Tax Dist:	
BUILDING MARKET VALUE		5,483,589
TOTAL MARKET OB/XF VALUE		86,416
TOTAL LAND VALUE - MARKET		4,000,000
TOTAL MARKET VALUE		9,570,005
SOH/AGL Deduction		4,372,558
ASSESSED VALUE		5,197,447
TOTAL EXEMPTION VALUE	HX HB WR	56,411
BASE TAXABLE VALUE		5,141,036
TOTAL JUST VALUE		9,570,005
NCON VALUE		0
INCOME VALUE		
PREVIOUS YEAR MKT VALUE		8,291,840

PERMIT NUM	DESCRIPTION	AMT	ISSUED
B0311190	XFOB	8,500	05/01/2003
B0209766	NEW CONSTR	675,000	06/01/2002

SALES DATA

OFF RECORD Number	DATE	TYPE INST	Q / U	V / I	RSN CD	SALE PRICE
2475/0231	6/18/2021	TD	U	I	11	100
GRANTOR: SNOW JOHN						
GRANTEE: SNOW JOHN QUALIFIED						
2475/0228	6/18/2021	SW	U	I	11	100
GRANTOR: SNOW JOHN & CAROLYN						
GRANTEE: SNOW JOHN						

BUILDING NOTES

BUILDING DIMENSIONS

FUS=[YR=2003;ORIG=15,0] E20 S32 S41 E32 N26 W9 N15 E21 S63 W5 S24 E5 S15 S25 W23 N3 N13 W2 N9 E2 N2 N14 E12 N17 N7 W11 N12 W42 N15 E6 N6 W6 N61 $
BAS=[YR=2003;ORIG=-50,-7] W20 S54 S28 E41 S12 E23 N11 N25 N11 W44 N47 $
FGR=[YR=2003;ORIG=-17,111] W12 S41 E1 S18 E11 N1 E11 N39 N19 W11 $
FOP=[YR=2003;ORIG=-70,75] S10 E20 S10 E7 E18 N1 E8 S17 E6 N24 W18 N12 W41 $
FOP=[YR=2003;ORIG=68,101] W9 S1 W24 N10 W20 N10 E42 S12 E11 S7 $
FOP=[YR=2003;ORIG=-27,25] W23 S15 E23 N15 $

EXTRA FEATURES

LN	OB/XF CODE	DESCRIPTION	BLD	CAP	L	W	UNITS	UT	Adj R	ADJ UNIT PRICE	ORIG COND	YEAR ON	YEAR ACTUAL	Q	% COND	OB/XF MKT VALUE	NOTES
3	0410	ELEVATOR	0	100	0	0	1.00	UT	10,000.00	10,000.00	100	2003	2003	3	100	10,000	
5	0416	DUNEWALKS	0	100	0	0	450.00	SF	30.00	30.00	100	2003	2003	3	20	2,700	
6	0860	POOL/SPA	0	100	0	0	1.00	UT	60,000.00	60,000.00	100	2003	2003	05	85	51,000	
8	1123	CB 8"	0	100	0	0	774.00	SF	6.15	6.15	100	2003	2003	3	80	3,808	
9	1126	CB/STC 8"	0	100	0	0	174.00	SF	8.00	8.00	100	2003	2003	3	80	1,114	
11	1126	CB/STC 8"	0	100	0	0	1,415.00	SF	8.00	8.00	100	2003	2003	3	80	9,056	
13	0504	FP-ELECTRI	0	100	0	0	1.00	UT	2,000.00	2,000.00	100	2003	2003	3	85	1,700	
14	0500	FP-PRE FAB	0	100	0	0	1.00	UT	3,500.00	3,500.00	100	2003	2003	3	85	2,975	
15	1244	WD DECK EX	0	100	44	26	1,144.00	SF	11.10	11.10	100	2005	2005	3	32	4,063	

LAND DESCRIPTION

TOTAL OB/XF 86,416

LN	USE CODE	CLS	LAND USE DESCRIPTION	CAP	RD	LOC ZONE	FRONT	DEPTH	TOT LND UTS	UNIT TYPE	DT	DPTH FACT	% COND	TOT ADJ	UNIT PRICE	ADJ UNIT PRICE	LAND VALUE	OTHER ADJUSTMENTS AND NOTES	YEAR	DENSITY	DECL	FRZ	YR	CONSRV
1	000120	C	RES OCEAN	100		RSF-1	0.00	0.00	1.00	LT		1.00	1.00	1.00	4,000,000.00	4,000,000.00	4,000,000							

REVIEW DATE 01/01/2023 BY CD Total Acres: 0.00 Total Land Value: 4,000,000 Market: 0 Agricultural: 0 Common: 4,000,000 PRINTED 07/09/2026 BY SYS