LOT 2
AMNDMT ESMT IN OR 800/516
ESMT AGREEMENT PT OR 766/1726

FEHRMAN D GARRY REVOCABLE TRUST/SPENCER JOANNA C T
8414 SANCTUARY LN
FERNANDINA BEACH, FL 32034

2026

00-00-30-0603-0002-0000

BUILDING CHARACTERISTICS

ELEMENT	CD	CONSTRUCTION
Exterior Wall	17	CB STUCCO 100
Roof Structur	08	IRREGULAR 100
Roof Cover	07	CONC TILE 100
Interior Wall	05	DRYWALL 90
Interior Wall	06	CUST PANEL 10
Interior Floo	14	CARPET 50
Interior Floo	19	MARBLE 50
Air Condition	03	CENTRAL 100
Heating Type	04	AIR DUCTED 100
Bedrooms		4 100
Bathrooms		5.5 100
Frame	02	WOOD FRAME 100
Stories	4.	4. 100
Units		0 100
Quality	05	Quality Level 05
DOR CODE	0100	SINGLE FAMILY
MAP NUM		MKT AREA 10
NEIGHBORHOOD/LOC	10005.00	

AREA TYPE	TOTAL GROSS AREA	PCT OF BASE	YEAR	TOT ADJ AREA	SUBAREA MARKET VALUE
BAS	146	100	1998	146	102,481
BAS	2,704	100	1998	2,704	1,898,006
BAS	630	100	2007	630	442,213
FGR	755	55	1998	415	291,299
FOP	46	30	1998	14	9,827
FOP	300	30	1998	90	63,173
FOP	348	30	1998	104	73,000
FOP	404	30	1998	121	84,933
FOP	624	30	1998	187	131,260
FOP	483	30	2007	145	101,780
TOTALS	11,203			7,525	5,281,987

MARKET ADJUSTMENTS

TYPE	MDL	EFF. AREA	TOT ADJ PTS	EFF. BASE RATE	REPL. COST NEW	AYB	EYB	ECON	FNCT		NORM	% COND
0500	22	7,525	475.1100	788.68	5,934,817	1998	2003	0	0	0	11.00	89.00

1 SFR CUST 100% - 2002 Heated Area: 5902 HX Base Yr 2002

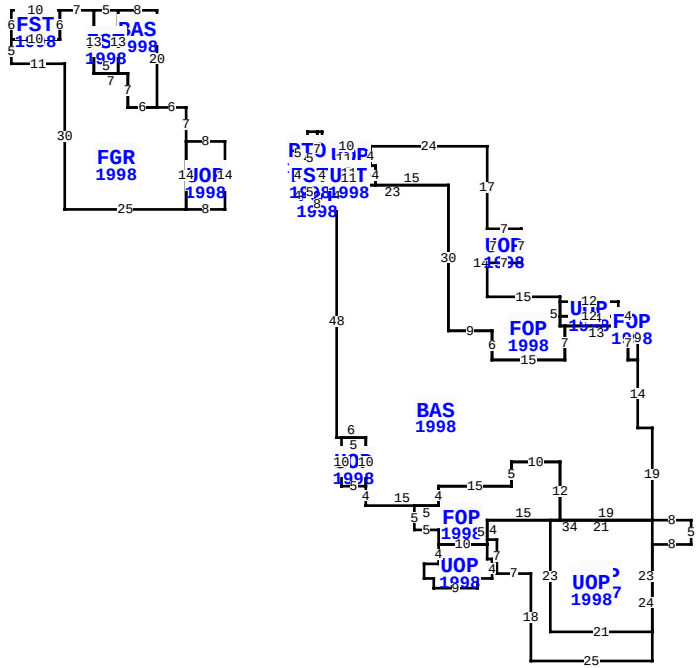

** This building has 28 Sub-Areas

8414 SANCTUARY LN, FERNANDINA BEACH

BLD DATE		LGL DATE	
XF DATE		LAND DATE	05/08/2025 MLU
INC DATE		AG DATE	

EXTRA FEATURES

LN	OB/XF CODE	DESCRIPTION	BLD	CAP	L	W	UNITS	UT	Adj R	ADJ UNIT PRICE	ORIG COND	YEAR ON	YEAR ACTUAL	Q	% COND	OB/XF MKT VALUE	NOTES
1	1126	CB/STC 8"	0	100	0	0	4,087.00	SF	8.00	8.00	100	1998	1998	3	72	23,541	
3	0097	AWNING CN	0	100	0	0	6.00	SF	65.00	65.00	100	1998	1998	3	40	156	
5	0416	DUNEWALKS	0	100	0	0	662.00	SF	30.00	30.00	100	1998	1998	3	20	3,972	
6	0504	FP-ELECTRI	0	100	0	0	1.00	UT	2,000.00	2,000.00	100	1998	1998	3	79	1,580	
10	0410	ELEVATOR	0	100	0	0	1.00	UT	10,000.00	10,000.00	100	1998	1998	3	100	10,000	
11	0504	FP-ELECTRI	0	100	0	0	1.00	UT	2,000.00	2,000.00	100	1998	1998	3	79	1,580	
13	1075	TRELLIS G	0	100	0	0	528.00	SF	35.00	35.00	100	1998	1998	3	24	4,435	
16	0860	POOL/SPA	0	100	0	0	1.00	UT	60,000.00	60,000.00	100	1998	1998	05	85	51,000	
18	0600	SUMMER KIT	0	100	0	0	1.00	UT	10,000.00	10,000.00	100	1998	1998	3	20	2,000	
19	0504	FP-ELECTRI	0	100	0	0	2.00	UT	2,000.00	2,000.00	100	2007	2007	3	89	3,560	

LAND DESCRIPTION

TOTAL OB/XF 101,824

LN	USE CODE	CLS	LAND USE DESCRIPTION	CAP	RD	LOC ZONE	FRONT	DEPTH	TOT LND UTS	UNIT TYPE	DT	DPTH FACT	% COND	TOT ADJ	UNIT PRICE	ADJ UNIT PRICE	LAND VALUE	OTHER ADJUSTMENTS AND NOTES	YEAR	DENSITY	DECL	FRZ	YR	CONSRV
1	000120	C	RES OCEAN	100		RSF-1	0.00	0.00	1.00	LT		1.00	1.00	1.00	4,000,000.00	4,000,000.00	4,000,000							

NASSAU COUNTY PROPERTY

PAGE 1 of 1 5

VALUATION SUMMARY

VALUATION BY		STANDARD
Tax Group: 5	Tax Dist:	
BUILDING MARKET VALUE		5,281,987
TOTAL MARKET OB/XF VALUE		101,824
TOTAL LAND VALUE - MARKET		4,000,000
TOTAL MARKET VALUE		9,383,811
SOH/AGL Deduction		5,410,425
ASSESSED VALUE		3,973,386
TOTAL EXEMPTION VALUE	HX HB	51,411
BASE TAXABLE VALUE		3,921,975
TOTAL JUST VALUE		9,383,811
NCON VALUE		0
INCOME VALUE		
PREVIOUS YEAR MKT VALUE		7,470,847

PERMIT NUM	DESCRIPTION	AMT	ISSUED
230007674	RPLC ALL WINDOWS	217,152	06/14/2023
B21195	XFOB	20,000	03/01/2008
M09140	MECH OTHER	0	02/01/2005
R046732	REPAIR/RRF	3,000	10/01/2004
B9703651	SWIM POOL	20,000	01/01/1997
B9703704	NEW CONSTR	1,000,000	01/01/1997

SALES DATA

OFF RECORD Number	DATE	TYPE INST	Q / U	V / I	RSN CD	SALE PRICE
2851/1479	3/03/2026	WD	U	I	11	100
GRANTOR: FEHRMAN DONALD GARRY						
GRANTEE: FEHRMAN D GARRY REV						
0973/0805	3/05/2001	WD	Q	I		3,535,000
GRANTOR: BARTRAM DAVID K & KAY						
GRANTEE: FEHRMAN DONALD GARR						

BUILDING NOTES

BUILDING DIMENSIONS

UOP=[YR=1998] W8FGR=[YR=1998] N7W6BAS=[YR=1998] N20W8
FST=[YR=1998] W5S13E5N13$S13E2 S7E6$W6 N7W7N13W7FST=[YR=1998]
W10S6 E10N6$S6 W10S5E11S30E25N14$S14 E8N14$
PTR=E15PTO=[YR=1998] E2N2E2 UOP=[YR=1998]
E1S3E10FOP=[YR=1998] E24S17 UOP=[YR=1998] E7S7W7N7$S14E15S1
UOP=[YR=1998] E12S3FOP=[YR=1998] E4S9 BAS=[YR=1998]
S14E3S19FOP=[YR=2007] W21 S23E21N23$UOP=[YR=1998] E8S5W8S24
W25N18W7N7W2N4E34$W19 FOP=[YR=1998] N12W10S5W15S4W5S5E5S3
UOP=[YR=1998] S4W3S3E2S2E9N2E3N4W1N3W10$E10 N5E15$
N12W10S5W15S4W15N4 UOP=[YR=1998] N10W5 S10E5$N10W6N48
FST=[YR=1998] W8N4FST=[YR=1998] N4E5S4W5$ E8S4$
N4E23S30E9S6E15N7E13S7E2 $W2N7W14N2E12$W12N3$ S5E1S7W15

REVIEW DATE 01/01/2023 BY CD Total Acres: 0.00 Total Land Value: 4,000,000 Market: 0 Agricultural: 0 Common: 4,000,000 PRINTED 07/09/2026 BY SYS