LOT 1
AMNDMT ESMT IN OR 800/516 &
VIEW ESMT IN OR 800/520

BOLDYGA RANDY S & CLAUDIA K
8426 SANCTUARY LANE
FERNANDINA BEACH, FL 32034

2026

00-00-30-0603-0001-0000

NASSAU COUNTY PROPERTY

BUILDING CHARACTERISTICS

ELEMENT	CD	CONSTRUCTION
Exterior Wall	17	CB STUCCO 100
Roof Structur	08	IRREGULAR 100
Roof Cover	07	CONC TILE 100
Interior Wall	05	DRYWALL 70
Interior Wall	08	DECORATIVE 30
Interior Floo	12	HARDWOOD 50
Interior Floo	14	CARPET 50
Air Condition	03	CENTRAL 100
Heating Type	04	AIR DUCTED 100
Bedrooms		4 100
Bathrooms		5.5 100
Frame	02	WOOD FRAME 100
Stories	3.	3. 100
Units		0 100
Quality	05	Quality Level 05

DOR CODE	0100	SINGLE FAMILY	
MAP NUM		MKT AREA	10
NEIGHBORHOOD/LOC	10005.00		

AREA TYPE	TOTAL GROSS AREA	PCT OF BASE	YEAR	TOT ADJ AREA	SUBAREA MARKET VALUE
BAS	66	100	2000	66	40,178
BAS	178	100	2000	178	108,358
FGR	823	55	2000	453	275,766
FOP	24	30	2000	7	4,261
FOP	56	30	2000	17	10,349
FOP	90	30	2000	27	16,436
FOP	112	30	2000	34	20,697
FOP	165	30	2000	50	30,438
FOP	210	30	2000	63	38,351
FST	30	55	2000	16	9,741
TOTALS	7,828			6,163	3,751,757

MARKET ADJUSTMENTS

TYPE	MDL	EFF. AREA	TOT ADJ PTS	EFF. BASE RATE	REPL. COST NEW	AYB	EYB	ECON	FNCT		NORM	% COND
0500	22	6,163	419.1092	695.72	4,287,722	2000	2000	0	0	0	12.50	87.50

1 SFR CUST 100% - 2023 Heated Area: 5147 HX Base Yr 2023

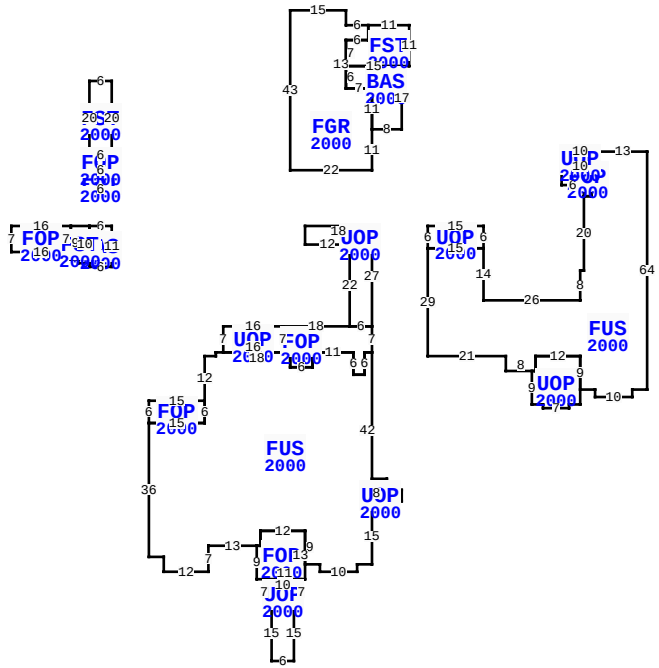

** This building has 22 Sub-Areas

8426 SANCTUARY LN, FERNANDINA BEACH

BLD DATE		LGL DATE	
XF DATE		LAND DATE	05/08/2025 MLU
INC DATE		AG DATE	

NASSAU COUNTY PROPERTY — VALUATION SUMMARY

VALUATION BY		STANDARD
Tax Group: 5	Tax Dist:	
BUILDING MARKET VALUE		3,751,757
TOTAL MARKET OB/XF VALUE		81,785
TOTAL LAND VALUE - MARKET		4,000,000
TOTAL MARKET VALUE		7,833,542
SOH/AGL Deduction		2,275,151
ASSESSED VALUE		5,558,391
TOTAL EXEMPTION VALUE	HX HB	51,411
BASE TAXABLE VALUE		5,506,980
TOTAL JUST VALUE		7,833,542
NCON VALUE		0
INCOME VALUE		
PREVIOUS YEAR MKT VALUE		5,572,722

PERMIT NUM	DESCRIPTION	AMT	ISSUED
B22114	HURRICANE SHUTTER	64,000	12/01/2008
B9805274	NEW CONSTR	624,000	08/01/1998
B9805303	SWIM POOL	27,000	08/01/1998

SALES DATA

OFF RECORD Number	DATE	TYPE INST	Q / U	V / I	RSN CD	SALE PRICE
2557/1404	4/21/2022	WD	Q	I	01	6,150,000
GRANTOR: HARRELD MARY GILLILAN						
GRANTEE: BOLDYGA RANDY S & C						
1104/0555	12/31/2002	WD	U	I	07	100
GRANTOR: WALKER JAMES III & JO						
GRANTEE: HARRELD MARY GILLIL						

BUILDING NOTES

BUILDING DIMENSIONS

UOP=[YR=2000] W18 S5 E12 S22 FOP=[YR=2000] W18
UOP=[YR=2000] W16 S7 FUS=[YR=2000] W2 S1 W3 S12
FOP=[YR=2000] W15 S6 E15 N6 $ S6 W15 S36 E4 S4 E12 N7 E13
FOP=[YR=2000] S9 E2 UOP=[YR=2000] S7 E2 S15 E6 N15 E2 N7
W10 $ E11 N13 W12 S4 W1 $ E1 N4 E12 S9 E4 S2 E10 N2 E4 N15
UOP=[YR=2000] E4 N2 E4 N3 W4 N3 W4 S8 $ N42 W2 S6 W3 N6 W11
S4 W6 N4 W18 $ E16 N7 $ S7 E2 S4 E6 N4 E11 S6 E3 N6 E2 N7 W6
$ E6 N27 $ PTR= E15UOP=[YR=2000] E15 S6 FUS=[YR=2000] S14
E26 N8 E1 N20 FOP=[YR=2000] N3 W6 N5 UOP=[YR=2000] N4 E10
S4 W10 $ E10 S5 W2 S3 W2 $ E2 N3 E2 N9 E13 S64 W4 S2 W10 N2
W4 UOP=[YR=2000] S4 W3 S1 W7 N1 W3 N9 E1 N4 E12 S9 $ N9 W12
S4 W8 N4 W21 N29 E15 $ W15 N6 $ W15 $ PTR= N15 FGR=[YR=2000]

EXTRA FEATURES

LN	OB/XF CODE	DESCRIPTION	BLD	CAP	L	W	UNITS	UT	Adj R	ADJ UNIT PRICE	ORIG COND	YEAR ON	YEAR ACTUAL	Q	% COND	OB/XF MKT VALUE	NOTES
1	0504	FP-ELECTRI	0	100	0	0	2.00	UT	2,000.00	2,000.00	100	2000	2000	3	81	3,240	
2	0860	POOL/SPA	0	100	0	0	1.00	UT	60,000.00	60,000.00	100	2000	2000	05	85	51,000	
5	0416	DUNEWALKS	0	100	0	0	708.00	SF	30.00	30.00	100	2000	2000	3	82	17,417	
13	0410	ELEVATOR	0	100	0	0	1.00	UT	10,000.00	10,000.00	100	2000	2000	3	100	10,000	
15	1242	WD DECK A	0	100	16	4	64.00	SF	10.00	10.00	100	2000	2000	3	20	128	

LAND DESCRIPTION

TOTAL OB/XF 81,785

LN	USE CODE	CLS	LAND USE DESCRIPTION	CAP	RD	LOC ZONE	FRONT	DEPTH	TOT LND UTS	UNIT TYPE	DT	DPTH FACT	% COND	TOT ADJ	UNIT PRICE	ADJ UNIT PRICE	LAND VALUE	OTHER ADJUSTMENTS AND NOTES	YEAR	DENSITY	DECL	FRZ	YR	CONSRV
1	000120	C	RES OCEAN	100		RSF-1	0.00	0.00	1.00	LT		1.00	1.00	1.00	4,000,000.00	4,000,000.00	4,000,000							

REVIEW DATE 01/01/2023 BY CD Total Acres: 0.00 Total Land Value: 4,000,000 Market: 0 Agricultural: 0 Common: 4,000,000 PRINTED 07/09/2026 BY SYS