PT OF LOTS 28 & 29
IN OR 939/53
THE RESIDENCE PB 5/149-152

RENEDO JESS S
8228 RESIDENCE CT
FERNANDINA BEACH, FL 32034

2026

00-00-30-0546-0028-0000

BUILDING CHARACTERISTICS

ELEMENT	CD	CONSTRUCTION
Exterior Wall	17	CB STUCCO 70
Exterior Wall	10	ABOVE AVG 30
Roof Structur	08	IRREGULAR 100
Roof Cover	07	CONC TILE 100
Interior Wall	05	DRYWALL 100
Interior Floo	14	CARPET 60
Interior Floo	11	CLAY TILE 40
Air Condition	03	CENTRAL 100
Heating Type	04	AIR DUCTED 100
Bedrooms		3 100
Bathrooms		3.5 100
Frame	02	WOOD FRAME 100
Stories	2.	2. 100
Units		0 100
Occupancy	00	NONE 100
Quality	06	Quality Level 06
DOR CODE	0100	SINGLE FAMILY
MAP NUM		MKT AREA 10
NEIGHBORHOOD/LOC	10003.00	

AREA TYPE	TOTAL GROSS AREA	PCT OF BASE	YEAR	TOT ADJ AREA	SUBAREA MARKET VALUE
BAS	1,980	100	2000	1,980	364,240
FGR	494	55	2000	272	50,037
FOP	25	30	2000	8	1,472
FOP	33	30	2000	10	1,840
FOP	133	30	2000	40	7,358
FOP	137	30	2000	41	7,542
FOP	191	30	2000	57	10,486
FUS	946	100	2000	946	174,026
PTO	33	5	2000	2	368
UOP	100	20	2000	20	3,680
TOTALS	4,256			3,413	627,854

MARKET ADJUSTMENTS

TYPE	MDL	EFF. AREA	TOT ADJ PTS	EFF. BASE RATE	REPL. COST NEW	AYB	EYB	ECON	FNCT		NORM	% COND
0500	01	3,413	126.4310	209.88	716,320	2000	2000	0	0	0	12.35	87.65

1 SFR CUST 0% - 2026 Heated Area: 2926 HX Base Yr

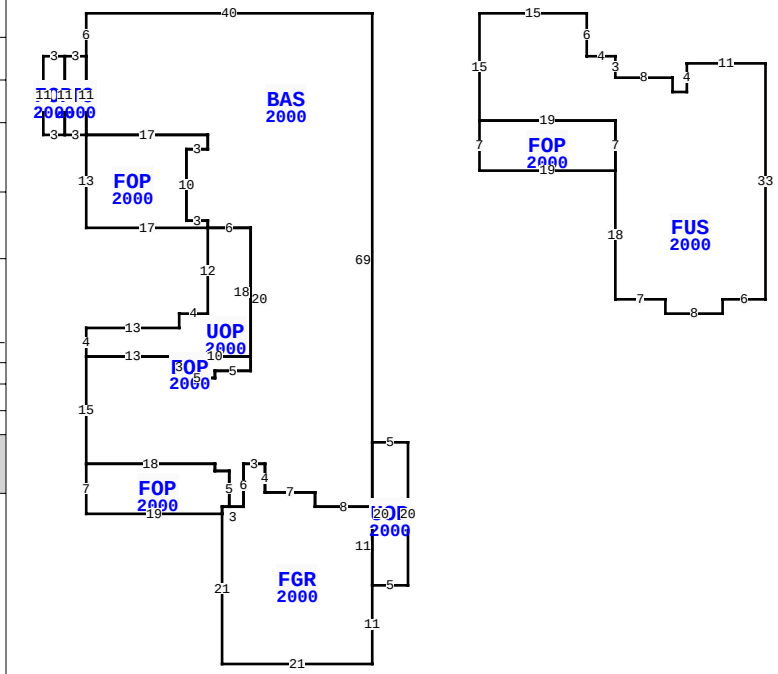

** This building has 11 Sub-Areas

8228 RESIDENCE CT, FERNANDINA BEACH

BLD DATE		LGL DATE	
XF DATE		LAND DATE	04/22/2026 MLU
INC DATE		AG DATE	

NASSAU COUNTY PROPERTY

PAGE 1 of 1 5

VALUATION SUMMARY

VALUATION BY	STANDARD
Tax Group: 5	Tax Dist:
BUILDING MARKET VALUE	627,854
TOTAL MARKET OB/XF VALUE	5,592
TOTAL LAND VALUE - MARKET	600,000
TOTAL MARKET VALUE	1,233,446
SOH/AGL Deduction	0
ASSESSED VALUE	1,233,446
TOTAL EXEMPTION VALUE	0
BASE TAXABLE VALUE	1,233,446
TOTAL JUST VALUE	1,233,446
NCON VALUE	0
INCOME VALUE	
PREVIOUS YEAR MKT VALUE	1,058,216

PERMIT NUM	DESCRIPTION	AMT	ISSUED
B9906723	NEW CONSTR	135,198	12/01/1999

SALES DATA

OFF RECORD Number	DATE	TYPE INST	Q / U	V / I	RSN CD	SALE PRICE
0939/0053	7/03/2000	WD	Q	I		523,200
GRANTOR: SUMMER BEACH DEVELOPM						
GRANTEE: RENEDO JESS S & MAR						
0860/1252	12/30/1998	WD	U	V	09	280,000
GRANTOR: CITADEL LIFE & HEALTH						
GRANTEE: SUMMER BEACH DEVELO						

BUILDING NOTES

BUILDING DIMENSIONS

BAS=[YR=2000] W40 S6 PTO=[YR=2000] W3 FOP=[YR=2000] W3 S11 E3 N11 $ S11 E3 N11 $ S11 FOP=[YR=2000] S13 E17 UOP=[YR=2000] S12 W4 S2 W13 S4 E13 FOP=[YR=2000] S3 E5 N1E5 N2 W10$ E10 N18W6$N1 W3 N10E3 N2 W17 $ E17 S2 W3 S10 E3 S1 E6 S20 W5 S1 W5 N3 W13 S15 FOP=[YR=2000] S7 E19 FGR=[YR=2000] S21 E21 N11 UOP=[YR=2000] E5 N20 W5 S20$ N11 W8 N2 W7 N4 W3 S6 W3 S1 $ N1 E1 N5 W2 N1 W18 $ E18 S1 E2 S5 E2 N6 E3 S4 E7 S2 E8 N69$ PTR= E15 FUS=[YR=2000] E15 S6 E4 S3 E8 S2 E2 N4 E11 S33 W6 S2 W8 N2 W7 N18 FOP=[YR=2000] W19 N7 E19 S7 $ N7 W19 N15 $ W15 $.

EXTRA FEATURES

LN	OB/XF CODE	DESCRIPTION	BLD	CAP	L	W	UNITS	UT	Adj R	ADJ UNIT PRICE	ORIG COND	YEAR ON	YEAR ACTUAL	Q	% COND	OB/XF MKT VALUE	NOTES
1	0504	FP-ELECTRI	0	0	0	0	1.00	UT	2,000.00	2,000.00	100	2000	2000	3	81	1,620	
3	1126	CB/STC 8"	0	0	0	0	662.00	SF	8.00	8.00	100	2000	2000	3	75	3,972	

LAND DESCRIPTION

TOTAL OB/XF 5,592

LN	USE CODE	CLS	LAND USE DESCRIPTION	CAP	RD	LOC ZONE	FRONT	DEPTH	TOT LND UTS	UNIT TYPE	DT	DPTH FACT	% COND	TOT ADJ	UNIT PRICE	ADJ UNIT PRICE	LAND VALUE	OTHER ADJUSTMENTS AND NOTES	YEAR	DENSITY	DECL	FRZ	YR	CONSRV
1	000100	C	RES	0		PUD	0.00	0.00	1.00	LT		1.00	1.00	1.00	600,000.00	600,000.00	600,000							

REVIEW DATE 01/01/2023 BY CD Total Acres: 0.00 Total Land Value: 600,000 Market: 0 Agricultural: 0 Common: 600,000 PRINTED 07/09/2026 BY SYS