LOT 9
IN OR 2052/1873
OCEAN DUNES PB 4/54

SATTERFIELD SUSAN C/WARD JEANNE C
4442 FLETCHER AVE S
FERNANDINA BEACH, FL 32034

2026

00-00-30-0450-0009-0000

BUILDING CHARACTERISTICS

ELEMENT	CD	CONSTRUCTION
Exterior Wall	17	CB STUCCO 100
Roof Structur	03	GABLE/HIP 100
Roof Cover	13	STAND SEAM 100
Interior Wall	05	DRYWALL 100
Interior Floo	11	CLAY TILE 50
Interior Floo	12	HARDWOOD 50
Air Condition	03	CENTRAL 100
Heating Type	04	AIR DUCTED 100
Bedrooms		4 100
Bathrooms		4.5 100
Frame	02	WOOD FRAME 100
Stories	2.	2. 100
Units		0 100
Quality	06	Quality Level 06

DOR CODE 0100 SINGLE FAMILY
MAP NUM | MKT AREA 03
NEIGHBORHOOD/LOC 1053.00

AREA TYPE	TOTAL GROSS AREA	PCT OF BASE	YEAR	TOT ADJ AREA	SUBAREA MARKET VALUE
BAL	248	15	2020	37	10,027
BAS	2,314	100	2020	2,314	627,097
FGR	648	55	2020	356	96,476
FOP	96	30	2020	29	7,859
FOP	120	30	2020	36	9,756
FOP	136	30	2020	41	11,111
FOP	788	30	2020	236	63,956
FUS	2,005	100	2020	2,005	543,358
PTO	50	5	2020	2	542
PTO	112	5	2020	6	1,626
TOTALS	6,829			5,093	1,380,209

MARKET ADJUSTMENTS

TYPE	MDL	EFF. AREA	TOT ADJ PTS	EFF. BASE RATE	REPL. COST NEW	AYB	EYB	ECON	FNCT		NORM	% COND
0500	11	5,093	167.4375	277.95	1,415,599	2020	2020	0	0	0	2.50	97.50

1 SFR CUST 100% - 2021 Heated Area: 4319 HX Base Yr 2021

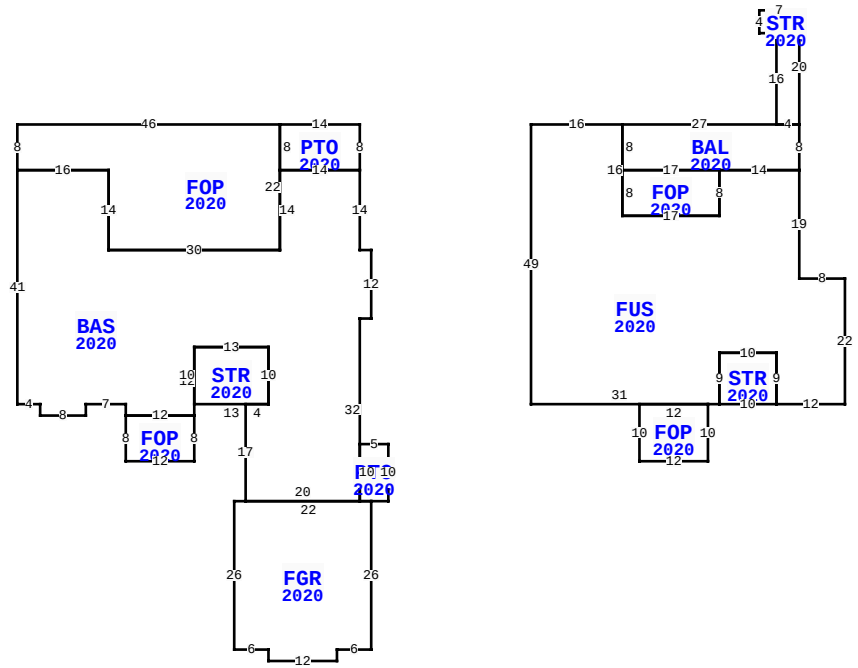

** This building has 13 Sub-Areas

4442 S FLETCHER AVE, FERNANDINA BEACH

BLD DATE		LGL DATE	
XF DATE		LAND DATE	04/24/2026 MLU
INC DATE		AG DATE	

NASSAU COUNTY PROPERTY

PAGE 1 of 1 8

VALUATION SUMMARY

VALUATION BY		STANDARD
Tax Group: 8	Tax Dist:	
BUILDING MARKET VALUE		1,380,209
TOTAL MARKET OB/XF VALUE		75,564
TOTAL LAND VALUE - MARKET		1,790,250
TOTAL MARKET VALUE		3,246,023
SOH/AGL Deduction		478,178
ASSESSED VALUE		2,767,845
TOTAL EXEMPTION VALUE	HX HB	51,411
BASE TAXABLE VALUE		2,716,434
TOTAL JUST VALUE		3,246,023
NCON VALUE		0
INCOME VALUE		
PREVIOUS YEAR MKT VALUE		3,087,622

PERMIT NUM	DESCRIPTION	AMT	ISSUED
B1911921	SWIM POOL	59,338	11/15/2019
B1703928	NEW CONSTR	581,658	05/03/2017

SALES DATA

OFF RECORD Number	DATE	TYPE INST	Q / U	V / I	RSN CD	SALE PRICE
2052/1873	6/13/2016	WD	Q	V	01	1,100,000
GRANTOR: TUFO CHRISTOPHER						
GRANTEE: SATTERFIELD SUSAN C						
1913/1574	3/11/2014	WD	U	V	11	100
GRANTOR: NEIL RUTH E						
GRANTEE: TUFO CHRISTOPHER						

BUILDING NOTES

EXTRA FEATURES

LN	OB/XF CODE	DESCRIPTION	BLD	CAP	L	W	UNITS	UT	Adj R	ADJ UNIT PRICE	ORIG COND	YEAR ON	YEAR ACTUAL	Q	% COND	OB/XF MKT VALUE	NOTES
2	0860	POOL/SPA	0	100	0	0	1.00	UT	50,000.00	50,000.00	100	2020	2020	04	95	47,500	
7	0416	DUNEWALKS	0	100	0	0	1,426.00	SF	24.00	24.00	100	2020	2020	3	82	28,064	

BUILDING DIMENSIONS

BAS=[YR=2020;ORIG=-60,8] S41 E4 S2 E8 N2 E7 S2 E12 N12 E13 S10 W4 S17 E20 N32 E2 N12 W2 N14 W14 S14 W30 N14 W16 $
FUS=[YR=2020;ORIG=30,0] E16 S16 E17 N8 E14 S19 E8 S22 W12 N9 W10 S9 W2 W31 N49 $
FOP=[YR=2020;ORIG=-14,0] W46 S8 E16 S14 E30 N22 $
FGR=[YR=2020;ORIG=-20,66] W2 S26 E6 S2 E12 N2 E6 N26 W22 $
BAL=[YR=2020;ORIG=46,0] E27 E4 S8 W14 W17 N8 $
FOP=[YR=2020;ORIG=63,8] W17 S8 E17 N8 $
STR=[YR=2020;ORIG=-29,49] N10 E13 S10 W13 $
FOP=[YR=2020;ORIG=61,49] S10 W12 N10 E12 $
PTO=[YR=2020;ORIG=0,0] W14 S8 E14 N8 $
FOP=[YR=2020;ORIG=-41,51] S8 E12 N8 W12 $

LAND DESCRIPTION

TOTAL OB/XF 75,564

LN	USE CODE	CLS	LAND USE DESCRIPTION	CAP	RD	LOC ZONE	FRONT	DEPTH	TOT LND UTS	UNIT TYPE	DT	DPTH FACT	% COND	TOT ADJ	UNIT PRICE	ADJ UNIT PRICE	LAND VALUE	OTHER ADJUSTMENTS AND NOTES	YEAR	DENSITY	DECL	FRZ	YR	CONSRV
1	000120	C	RES OCEAN	100		RSF-1	85.00	400.00	85.25	FF		1.00	1.00	1.00	21,000.00	21,000.00	1,790,250							

REVIEW DATE 01/01/2023 BY CD Total Acres: 0.00 Total Land Value: 1,790,250 Market: 0 Agricultural: 0 Common: 1,790,250 PRINTED 07/09/2026 BY SYS