LOT 8
IN OR 2021/1803
OCEAN DUNES PB 4/54

BRINTNELL ROBERT R/MILLER MARLA M
PO BOX 17005
FERNANDINA BEACH, FL 32035

2026

00-00-30-0450-0008-0000

NASSAU COUNTY PROPERTY

BUILDING CHARACTERISTICS

ELEMENT	CD	CONSTRUCTION
Exterior Wall	16	WD FR STUC 100
Roof Structur	08	IRREGULAR 100
Roof Cover	11	SLATE 100
Interior Wall	05	DRYWALL 100
Interior Floo	11	CLAY TILE 90
Interior Floo	08	SHT VINYL 10
Air Condition	03	CENTRAL 100
Heating Type	04	AIR DUCTED 100
Bedrooms		4 100
Bathrooms		3.5 100
Frame	02	WOOD FRAME 100
Stories	3.	3. 100
Units		0 100
BUD8 Adjustme	05	DIST 1A 100
Quality	04	Quality Level 04
DOR CODE	0100	SINGLE FAMILY
MAP NUM		MKT AREA 03
NEIGHBORHOOD/LOC	1053.00	

AREA TYPE	TOTAL GROSS AREA	PCT OF BASE	YEAR	TOT ADJ AREA	SUBAREA MARKET VALUE
BAS	780	100	1993	780	156,068
BAS	1,324	100	1993	1,324	264,916
BAS	1,980	100	1993	1,980	396,172
FOP	63	30	2007	19	3,802
UGR	679	45	1993	306	61,227
UOP	70	20	1993	14	2,801
UOP	93	20	1993	19	3,802
UOP	236	20	1993	47	9,404
UOP	688	20	1993	138	27,612
UOP	30	20	2007	6	1,200
TOTALS	6,398			4,724	945,212

MARKET ADJUSTMENTS

TYPE	MDL	EFF. AREA	TOT ADJ PTS	EFF. BASE RATE	REPL. COST NEW	AYB	EYB	ECON	FNCT		NORM	% COND
0500	11	4,724	146.1002	242.53	1,145,712	1979	1990	0	0	0	17.50	82.50

1 SFR CUST 100% - 2017 Heated Area: 4084 HX Base Yr 2017

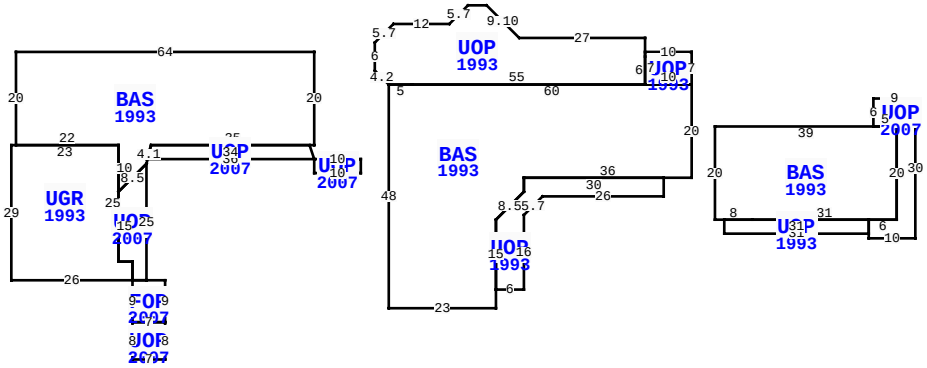

** This building has 14 Sub-Areas

4440 S FLETCHER AVE, FERNANDINA BEACH

BLD DATE		LGL DATE	
XF DATE		LAND DATE	04/24/2026 MLU
INC DATE		AG DATE	

EXTRA FEATURES

L N	OB/XF CODE	DESCRIPTION	BLD	CAP	L	W	UNITS	UT	Adj R	ADJ UNIT PRICE	ORIG COND	YEAR ON	YEAR ACTUAL	Q	% COND	OB/XF MKT VALUE	NOTES
1	0860	POOL/SPA	0	100	0	0	1.00	UT	40,000.00	40,000.00	100	1980	1980	03	85	34,000	
2	1242	WD DECK A	0	100	0	0	800.00	SF	10.00	10.00	100	1980	1980	3	20	1,600	
3	0500	FP-PRE FAB	0	100	0	0	2.00	UT	3,500.00	3,500.00	100	1980	1980	3	42	2,940	
6	0416	DUNEWALKS	0	100	0	0	1,058.00	SF	30.00	30.00	100	1998	1998	3	20	6,348	

VALUATION SUMMARY

VALUATION BY		STANDARD
Tax Group: 8	Tax Dist:	
BUILDING MARKET VALUE		945,212
TOTAL MARKET OB/XF VALUE		44,888
TOTAL LAND VALUE - MARKET		1,785,000
TOTAL MARKET VALUE		2,775,100
SOH/AGL Deduction		1,026,228
ASSESSED VALUE		1,748,872
TOTAL EXEMPTION VALUE	HX HB	51,411
BASE TAXABLE VALUE		1,697,461
TOTAL JUST VALUE		2,775,100
NCON VALUE		0
INCOME VALUE		
PREVIOUS YEAR MKT VALUE		2,550,455

PERMIT NUM	DESCRIPTION	AMT	ISSUED
17007707	HURRSHUTTER	21,047	12/06/2017
B1631766	REMODEL	100,000	02/08/2016
G01578	GAS	565	11/01/2010
B18493	REMODEL	9,500	10/31/2006
B0618343	REPAIR/RRF	48,000	10/31/2006

SALES DATA

OFF RECORD Number	DATE	TYPE INST	Q U	V I	RSN CD	SALE PRICE
2021/1803	1/06/2016	WD	Q	I	02	1,700,000
GRANTOR: QUINN SHIRLEY C						
GRANTEE: BRINTNELL ROBERT RA						
0262/0686	4/10/1978	WD	Q	V		49,500
GRANTOR: AMELIA BEACH CORPORAT						
GRANTEE: QUINN FRANCIS J & S						

BUILDING NOTES

BUILDING DIMENSIONS

BAS=[YR=1993;ORIG=21,7] W5 S48 E23 N4 N15 U6R6 N3 E36 N20 W60 $
BAS=[YR=1993;ORIG=0,0] W64 S20 E22 S10 U6R6 U4R1 E35 N20 $
BAS=[YR=1993;ORIG=86,16] S20 E8 E31 N20 W39 $
UOP=[YR=1993;ORIG=71,1] N4 W27 U7L7 W4 D4L4 W12 D4L4 S6 D3R3 E55 N6 $
UGR=[YR=1993;ORIG=-65,20] S29 E26 N4 W3 N25 W23 $
UOP=[YR=1993;ORIG=39,51] E6 N16 U4R4 E26 N4 W30 S3 D6L6 S15 $
UOP=[YR=2007;ORIG=129,10] W9 S6 E5 S20 W6 S4 E10 N30 $
UOP=[YR=2007;ORIG=-36,49] N25 D6L6 S15 E3 S4 E3 $
UOP=[YR=1993;ORIG=81,0] W10 S7 E10 N7 $
UOP=[YR=2007;ORIG=-36,23] E36 U3L1 W34 D3L1 $

LAND DESCRIPTION

TOTAL OB/XF 44,888

L N	USE CODE	CLS	LAND USE DESCRIPTION	CAP	R D	LOC ZONE	FRONT	DEPTH	TOT LND UTS	UNIT TYPE	D T	DPTH FACT	% COND	TOT ADJ	UNIT PRICE	ADJ UNIT PRICE	LAND VALUE	OTHER ADJUSTMENTS AND NOTES	YEAR	DENSITY	DECL	FRZ	YR	CONSRV
1	000120	C	RES OCEAN	100		RSF-1	85.00	400.00	85.00	FF		1.00	1.00	1.00	21,000.00	21,000.00	1,785,000							

REVIEW DATE 01/01/2023 BY CD Total Acres: 0.00 Total Land Value: 1,785,000 Market: 0 Agricultural: 0 Common: 1,785,000 PRINTED 07/09/2026 BY SYS