LOT 17
IN OR 2149/923
DUNES OF AMELIA PHASE 1

VICTORIANO PAUL A
352 DUNES OF AMELIA DRIVE
FERNANDINA BEACH, FL 32034

2026

00-00-30-044D-0017-0000

BUILDING CHARACTERISTICS

ELEMENT	CD	CONSTRUCTION
Exterior Wall	11	BD/BTN AVG 100
Roof Structur	08	IRREGULAR 100
Roof Cover	03	COMP SHNGL 100
Interior Wall	05	DRYWALL 100
Interior Floo	11	CLAY TILE 60
Interior Floo	14	CARPET 40
Air Condition	03	CENTRAL 100
Heating Type	04	AIR DUCTED 100
Bedrooms		4 100
Bathrooms		3 100
Frame	02	WOOD FRAME 100
Stories	1.5	1.5 100
Units		0 100
Occupancy	00	NONE 100
Quality	06	Quality Level 06
DOR CODE	0100	SINGLE FAMILY
MAP NUM		MKT AREA 01
NEIGHBORHOOD/LOC	2121.00	

AREA TYPE	TOTAL GROSS AREA	PCT OF BASE	YEAR	TOT ADJ AREA	SUBAREA MARKET VALUE
BAS	1,909	100	2017	1,909	331,286
FGR	420	55	2017	231	40,088
FOP	48	30	2017	14	2,430
FOP	224	30	2017	67	11,628
FUS	372	100	2017	372	64,556
STR	44	10	2017	4	694
TOTALS	3,017			2,597	450,682

MARKET ADJUSTMENTS

TYPE	MDL	EFF. AREA	TOT ADJ PTS	EFF. BASE RATE	REPL. COST NEW	AYB	EYB	ECON	FNCT		NORM	% COND
0900	01	2,597	130.0512	180.77	469,460	2017	2017	0	0	0	4.00	96.00

1 SNGL FAM 100% - 2018 Heated Area: 2281 HX Base Yr 2018

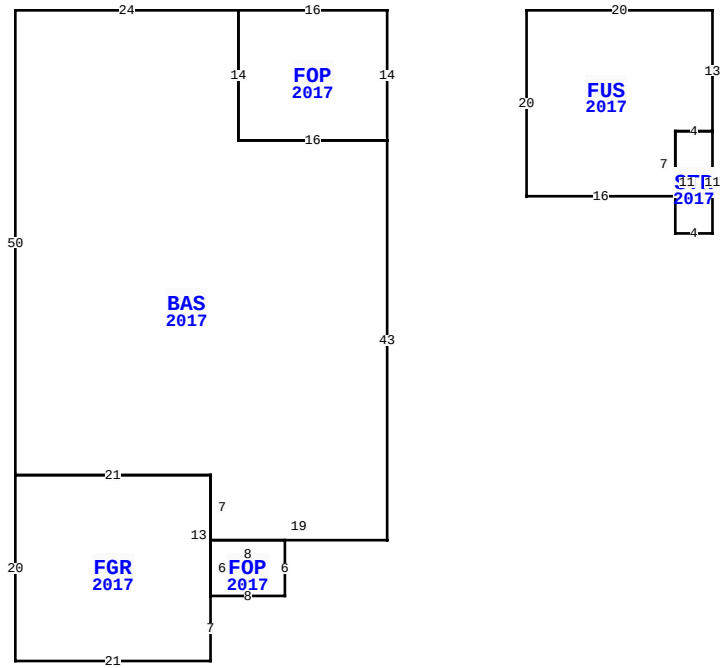

352 DUNES OF AMELIA DR, FERNANDINA BEACH

BLD DATE		LGL DATE	
XF DATE		LAND DATE	03/31/2025 MLU
INC DATE		AG DATE	

NASSAU COUNTY PROPERTY

PAGE 1 of 1 2

VALUATION SUMMARY

VALUATION BY		STANDARD
Tax Group: 2	Tax Dist:	
BUILDING MARKET VALUE		450,682
TOTAL MARKET OB/XF VALUE		0
TOTAL LAND VALUE - MARKET		165,000
TOTAL MARKET VALUE		615,682
SOH/AGL Deduction		248,890
ASSESSED VALUE		366,792
TOTAL EXEMPTION VALUE	HX HB	51,411
BASE TAXABLE VALUE		315,381
TOTAL JUST VALUE		615,682
NCON VALUE		0
INCOME VALUE		
PREVIOUS YEAR MKT VALUE		599,759

PERMIT NUM	DESCRIPTION	AMT	ISSUED
20170773	CO ISSUED	0	09/22/2017
20170776	NEW CONSTR	283,229	03/16/2017

SALES DATA

OFF RECORD Number	DATE	TYPE INST	Q U	V I	RSN CD	SALE PRICE
2149/0923	9/28/2017	WD	Q	I	02	353,200
GRANTOR: DREAM FINDERS HOMES L						
GRANTEE: VICTORIANO PAUL A						
2081/1657	11/03/2016	SW	Q	V	05	516,000
GRANTOR: RIVERSIDE HOMES OF NO						
GRANTEE: DREAM FINDERS HOMES						

BUILDING NOTES

BUILDING DIMENSIONS

FOP=[YR=2017] W16 BAS=[YR=2017] W24 S50 FGR=[YR=2017] S20 E21 N7 FOP=[YR=2017] E8 N6 W8 S6$ N13 W21$ E21 S7 E19 N43 W16 N14$ S14 E16 N14$ PTR= E15 FUS=[YR=2017] E20 S13 STR=[YR=2017] S11 W4 N11 E4$ W4 S7 W16 N20$ W15$.

EXTRA FEATURES

LN	OB/XF CODE	DESCRIPTION	BLD	CAP	L	W	UNITS	UT	Adj R	ADJ UNIT PRICE	ORIG COND	YEAR ON	YEAR ACTUAL	Q	% COND	OB/XF MKT VALUE	NOTES

LAND DESCRIPTION

TOTAL OB/XF 0

LN	USE CODE	CLS	LAND USE DESCRIPTION	CAP	RD	LOC ZONE	FRONT	DEPTH	TOT LND UTS	UNIT TYPE	DT	DPTH FACT	% COND	TOT ADJ	UNIT PRICE	ADJ UNIT PRICE	LAND VALUE	OTHER ADJUSTMENTS AND NOTES	YEAR	DENSITY	DECL	FRZ	YR	CONSRV
1	000100	C	RES	100		RLM	0.00	0.00	1.00	LT		1.00	1.00	1.00	165,000.00	165,000.00	165,000							

REVIEW DATE 02/27/2024 BY KBA Total Acres: 0.00 Total Land Value: 165,000 Market: 0 Agricultural: 0 Common: 165,000 PRINTED 07/09/2026 BY SYS