LOT 6
RIVERBEND PBK 8/182

ADAMS JOSEPH A & SUSAN S
2930 RIVERBEND WALK
FERNANDINA BEACH, FL 32034

2026

00-00-30-0440-0006-0000

NASSAU COUNTY PROPERTY

BUILDING CHARACTERISTICS

ELEMENT	CD	CONSTRUCTION
Exterior Wall	10	ABOVE AVG 100
Roof Structur	08	IRREGULAR 100
Roof Cover	13	STAND SEAM 100
Interior Wall	05	DRYWALL 70
Interior Wall	06	CUST PANEL 30
Interior Floo	12	HARDWOOD 70
Interior Floo	14	CARPET 30
Air Condition	03	CENTRAL 100
Heating Type	04	AIR DUCTED 100
Bedrooms		4 100
Bathrooms		4 100
Frame	02	WOOD FRAME 100
Stories	2.	2. 100
Units		0 100
Quality	03	Quality Level 03
DOR CODE	0100	SINGLE FAMILY
MAP NUM		MKT AREA 01
NEIGHBORHOOD/LOC	2038.00	

AREA TYPE	TOTAL GROSS AREA	PCT OF BASE	YEAR	TOT ADJ AREA	SUBAREA MARKET VALUE
BAS	2,775	100	2019	2,775	851,975
FGR	758	55	2019	417	128,026
FOP	184	30	2019	55	16,886
FOP	184	30	2019	55	16,886
FOP	252	30	2019	76	23,334
FUS	741	100	2019	741	227,500
STR	96	10	2019	10	3,070
TOTALS	4,990			4,129	1,267,676

MARKET ADJUSTMENTS

TYPE	MDL	EFF. AREA	TOT ADJ PTS	EFF. BASE RATE	REPL. COST NEW	AYB	EYB	ECON	FNCT		NORM	% COND
0500	12	4,129	189.6928	314.89	1,300,181	2019	2019	0	0	0	2.50	97.50

1 SFR CUST 100% - 2023 Heated Area: 3516 HX Base Yr 2023

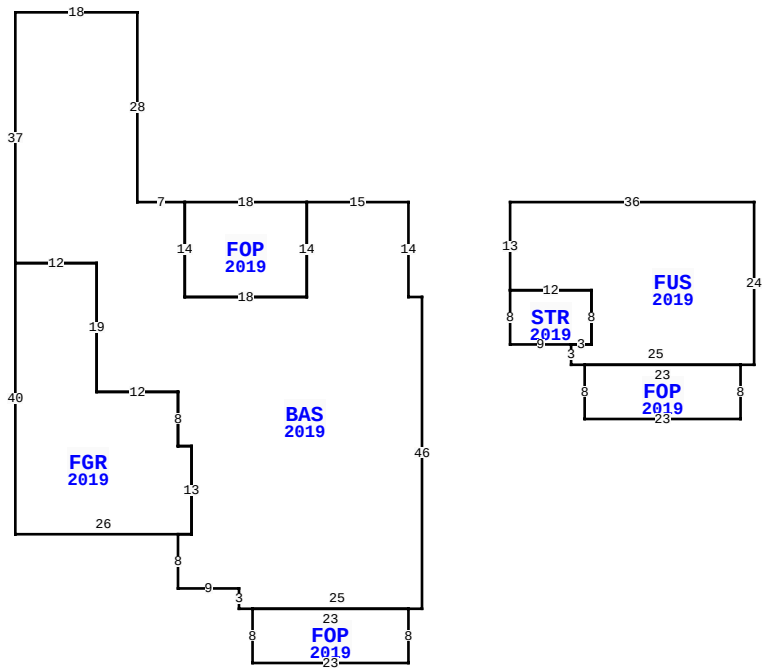

BLD DATE		LGL DATE	
XF DATE		LAND DATE	03/25/2026 MLU
INC DATE		AG DATE	

2930 RIVERBEND WALK, FERNANDINA BEACH

NASSAU COUNTY PROPERTY — VALUATION SUMMARY

VALUATION BY		STANDARD
Tax Group: 2	Tax Dist:	
BUILDING MARKET VALUE		1,267,676
TOTAL MARKET OB/XF VALUE		1,960
TOTAL LAND VALUE - MARKET		350,000
TOTAL MARKET VALUE		1,619,636
SOH/AGL Deduction		499,381
ASSESSED VALUE		1,120,255
TOTAL EXEMPTION VALUE	HX HB	51,411
BASE TAXABLE VALUE		1,068,844
TOTAL JUST VALUE		1,619,636
NCON VALUE		0
INCOME VALUE		
PREVIOUS YEAR MKT VALUE		1,476,209

PERMIT NUM	DESCRIPTION	AMT	ISSUED
20181243	NEW CONSTR	456,015	04/13/2018

SALES DATA

OFF RECORD Number	DATE	TYPE INST	Q U	V I	RSN CD	SALE PRICE
2582/0065	7/28/2022	WD	Q	I	01	1,325,000
GRANTOR: HAMER DOUGLAS T & CAR						
GRANTEE: ADAMS JOSEPH A & SU						
2376/0140	7/10/2020	WD	Q	I	01	712,000
GRANTOR: NEW ATLANTIC BUILDERS						
GRANTEE: HAMER DOUGLAS T & C						

BUILDING NOTES

BUILDING DIMENSIONS

BAS=[YR=2019] W15 FOP=[YR=2019] W18 S14 E18 N14$ S14 W18 N14 W7 N28 W18 S37 FGR=[YR=2019] S40 E26 N13 W2 N8 W12 N19 W12$ E12 S19 E12 S8 E2 S13 W2 S8 E9 S3 E2 FOP=[YR=2019] S8 E23 N8 W23$ E25 N46 W2 N14$ PTR=E15 FUS=[YR=2019] E36 S24 W2 FOP=[YR=2019] S8 W23 N8 E23$ W25 N3 STR=[YR=2019] W9 N8 E12 S8 W3$ E3 N8 W12 N13$ W15$.

EXTRA FEATURES

L N	OB/XF CODE	DESCRIPTION	BLD	CAP	L	W	UNITS	UT	Adj R	ADJ UNIT PRICE	ORIG COND	YEAR ON	YEAR ACTUAL	Q	% COND	OB/XF MKT VALUE	NOTES
1	0504	FP-ELECTRI	0	100	0	0	1.00	UT	2,000.00	2,000.00	100	2019	2019	3	98	1,960	

LAND DESCRIPTION

TOTAL OB/XF 1,960

L N	USE CODE	CLS	LAND USE DESCRIPTION	CAP	R D	LOC ZONE	FRONT	DEPTH	TOT LND UTS	UNIT TYPE	D T	DPTH FACT	% COND	TOT ADJ	UNIT PRICE	ADJ UNIT PRICE	LAND VALUE	OTHER ADJUSTMENTS AND NOTES	YEAR	DENSITY	DECL	FRZ	YR	CONSRV
1	000100	C	RES	100		R-3	0.00	0.00	1.00	LT		1.00	1.00	1.00	350,000.00	350,000.00	350,000							

REVIEW DATE 01/01/2023 BY CD Total Acres: 0.00 Total Land Value: 350,000 Market: 0 Agricultural: 0 Common: 350,000 PRINTED 07/09/2026 BY SYS