LOT 13
LANDYNS LAKE PB 6/277

SCHEININGER DAVID W & JEANNIE L
2884 LANDYNS CIRCLE
FERNANDINA BEACH, FL 32034

2026

00-00-30-035L-0013-0000

NASSAU COUNTY PROPERTY

BUILDING CHARACTERISTICS

ELEMENT	CD	CONSTRUCTION
Exterior Wall	10	ABOVE AVG 100
Roof Structur	08	IRREGULAR 100
Roof Cover	03	COMP SHNGL 100
Interior Wall	05	DRYWALL 100
Interior Floo	14	CARPET 60
Interior Floo	07	CORK/VTILE 40
Air Condition	03	CENTRAL 100
Heating Type	04	AIR DUCTED 100
Bedrooms		4 100
Bathrooms		2.5 100
Frame	02	WOOD FRAME 100
Stories	2.	2. 100
Units		0 100
Occupancy	00	NONE 100
Quality	04	Quality Level 04
DOR CODE	0100	SINGLE FAMILY
MAP NUM		MKT AREA 01
NEIGHBORHOOD/LOC	1077.00	

AREA TYPE	TOTAL GROSS AREA	PCT OF BASE	YEAR	TOT ADJ AREA	SUBAREA MARKET VALUE
BAS	1,233	100	2002	1,233	191,809
DCK	160	10	2002	16	2,489
FGR	499	55	2002	274	42,624
FOP	140	30	2002	42	6,533
FST	24	55	2002	13	2,022
FUS	1,473	100	2002	1,473	229,145
TOTALS	3,529			3,051	474,623

MARKET ADJUSTMENTS

TYPE	MDL	EFF. AREA	TOT ADJ PTS	EFF. BASE RATE	REPL. COST NEW	AYB	EYB	ECON	FNCT		NORM	% COND
0500	01	3,051	105.2940	174.79	533,284	2002	2002	0	0	0	11.00	89.00

1 SFR CUST 100% - 2020 Heated Area: 2706 HX Base Yr 2020

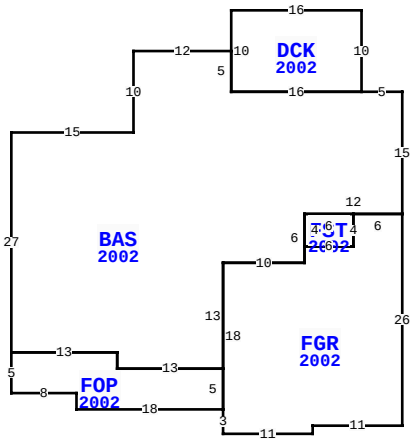

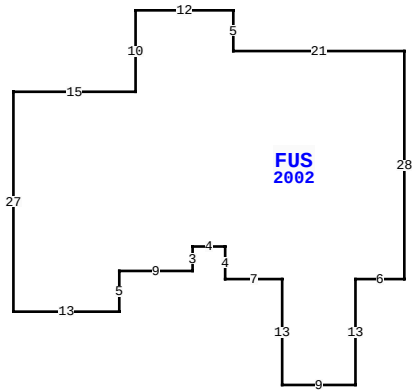

2884 LANDYNS CIR, FERNANDINA BEACH

BLD DATE		LGL DATE	
XF DATE		LAND DATE	04/21/2026 MLU
INC DATE		AG DATE	

NASSAU COUNTY PROPERTY — VALUATION SUMMARY

VALUATION BY		STANDARD
Tax Group: 2	Tax Dist:	
BUILDING MARKET VALUE		474,623
TOTAL MARKET OB/XF VALUE		2,940
TOTAL LAND VALUE - MARKET		305,000
TOTAL MARKET VALUE		782,563
SOH/AGL Deduction		411,712
ASSESSED VALUE		370,851
TOTAL EXEMPTION VALUE	HX HB VX	56,411
BASE TAXABLE VALUE		314,440
TOTAL JUST VALUE		782,563
NCON VALUE		0
INCOME VALUE		
PREVIOUS YEAR MKT VALUE		760,911

PERMIT NUM	DESCRIPTION	AMT	ISSUED
20121974	H/AC	4,250	09/25/2012
20121703	HVAC	4,250	08/17/2012
B012347	NEW CONSTR	190,000	10/25/2001

SALES DATA

OFF RECORD Number	DATE	TYPE INST	Q / U	V / I	RSN CD	SALE PRICE
2280/1535	5/22/2019	WD	Q	I	01	425,000
GRANTOR: WANZO SARAH E						
GRANTEE: SCHEININGER DAVID W						
1672/0302	3/22/2010	WD	U	I	12	225,000
GRANTOR: DEUTSCHE BANK NATIONA						
GRANTEE: WANZO SARAH E						

BUILDING NOTES

BUILDING DIMENSIONS

BAS=[YR=2002] W5 DCK=[YR=2002] N10 W16 S10 E16 $ W16 N5 W12 S10 W15 S27 FOP=[YR=2002] S5 E8 S2 E18 FGR=[YR=2002] S3 E11 N1 E11 N26 W6 FST=[YR=2002] W6 S4 E6 N4 $ S4 W6 S2 W10 S18 $ N5 W13 N2 W13 $ E13 S2 E13 N13 E10 N6 E12 N15 $ PTR= E15 FUS=[YR=2002] E15 N10E12 S5 E21 S28 W6 S13 W9 N13 W7 N4 W4 S3 W9 S5 W13 N27 $ W15 $.

EXTRA FEATURES

L N	OB/XF CODE	DESCRIPTION	BLD	CAP	L	W	UNITS	UT	Adj R	ADJ UNIT PRICE	ORIG COND	YEAR ON	YEAR ACTUAL	Q	% COND	OB/XF MKT VALUE	NOTES
1	0500	FP-PRE FAB	0	100	0	0	1.00	UT	3,500.00	3,500.00	100	2002	2002	3	84	2,940	

LAND DESCRIPTION

TOTAL OB/XF 2,940

L N	USE CODE	CLS	LAND USE DESCRIPTION	CAP	R D	LOC ZONE	FRONT	DEPTH	TOT LND UTS	UNIT TYPE	D T	DPTH FACT	% COND	TOT ADJ	UNIT PRICE	ADJ UNIT PRICE	LAND VALUE	OTHER ADJUSTMENTS AND NOTES	YEAR	DENSITY	DECL	FRZ	YR	CONSRV
1	000100	C	RES	100		R-1	0.00	0.00	1.00	LT		1.00	1.00	1.00	305,000.00	305,000.00	305,000							

REVIEW DATE 01/01/2023 BY CD Total Acres: 0.00 Total Land Value: 305,000 Market: 0 Agricultural: 0 Common: 305,000 PRINTED 07/09/2026 BY SYS