LOT 4
ISLAND BLUFF SUB PB 5/92

CAYLESS JUSTIN & BRITTANY
1704 BLUE HERON LANE
FERNANDINA BEACH, FL 32034

**2026**

**00-00-30-031B-0004-0000**

## BUILDING CHARACTERISTICS

| ELEMENT | CD | CONSTRUCTION |
|---|---|---|
| Exterior Wall | 16 | WD FR STUC 100 |
| Roof Structur | 08 | IRREGULAR 100 |
| Roof Cover | 03 | COMP SHNGL 100 |
| Interior Wall | 05 | DRYWALL 100 |
| Interior Floo | 14 | CARPET 70 |
| Interior Floo | 08 | SHT VINYL 30 |
| Air Condition | 03 | CENTRAL 100 |
| Heating Type | 04 | AIR DUCTED 100 |
| Bedrooms | | 3 100 |
| Bathrooms | | 2 100 |
| Frame | 02 | WOOD FRAME 100 |
| Stories | 1. | 1. 100 |
| Units | | 0 100 |
| Occupancy | 00 | NONE 100 |
| Quality | 06 | Quality Level 06 |
| DOR CODE | 0100 | SINGLE FAMILY |
| MAP NUM | | MKT AREA 02 |
| NEIGHBORHOOD/LOC | 2009.00 | |

| AREA TYPE | TOTAL GROSS AREA | PCT OF BASE | YEAR | TOT ADJ AREA | SUBAREA MARKET VALUE |
|---|---|---|---|---|---|
| BAS | 1,654 | 100 | 1999 | 1,654 | 257,400 |
| FGR | 420 | 55 | 1999 | 231 | 35,949 |
| FOP | 56 | 30 | 1999 | 17 | 2,646 |
| FSP | 160 | 40 | 1999 | 64 | 9,960 |
| PTO | 60 | 5 | 1999 | 3 | 467 |
| STP | 60 | 10 | 1999 | 6 | 933 |
| TOTALS | 2,410 | | | 1,975 | 307,355 |

## MARKET ADJUSTMENTS

| TYPE | MDL | EFF. AREA | TOT ADJ PTS | EFF. BASE RATE | REPL. COST NEW | AYB | EYB | ECON | FNCT | | NORM | % COND |
|---|---|---|---|---|---|---|---|---|---|---|---|---|
| 0900 | 01 | 1,975 | 125.0970 | 173.88 | 343,413 | 1999 | 2004 | 0 | 0 | 0 | 10.50 | 89.50 |

1 SNGL FAM 0% - 0 Heated Area: 1654 HX Base Yr

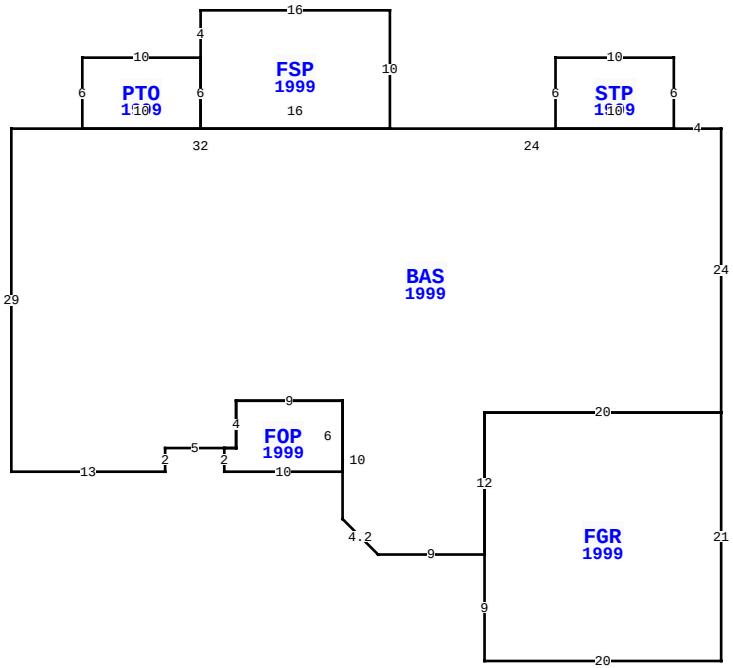


| | | | |
|---|---|---|---|
| BLD DATE | | LGL DATE | |
| XF DATE | | LAND DATE | 05/06/2025 MLU |
| INC DATE | | AG DATE | |

1704 BLUE HERON LN, FERNANDINA BEACH

## NASSAU COUNTY PROPERTY

PAGE 1 of 1 8

### VALUATION SUMMARY

| | |
|---|---|
| VALUATION BY | STANDARD |
| Tax Group: 8 | Tax Dist: |
| BUILDING MARKET VALUE | 307,355 |
| TOTAL MARKET OB/XF VALUE | 449 |
| TOTAL LAND VALUE - MARKET | 225,000 |
| TOTAL MARKET VALUE | 532,804 |
| SOH/AGL Deduction | 0 |
| ASSESSED VALUE | 532,804 |
| TOTAL EXEMPTION VALUE | 0 |
| BASE TAXABLE VALUE | 532,804 |
| TOTAL JUST VALUE | 532,804 |
| NCON VALUE | 0 |
| INCOME VALUE | |
| PREVIOUS YEAR MKT VALUE | 532,691 |

| PERMIT NUM | DESCRIPTION | AMT | ISSUED |
|---|---|---|---|
| 20218968 | REPAIR/RRF | 9,750 | 08/01/2021 |
| B995829 | NEW CONSTR | 1,830 | 03/09/1999 |
| B985571 | NEW CONSTR | 80,000 | 11/01/1998 |

## SALES DATA

| OFF RECORD Number | DATE | TYPE INST | Q / U | V / I | RSN CD | SALE PRICE |
|---|---|---|---|---|---|---|
| 2515/1329 | 11/18/2021 | WD | Q | I | 01 | 480,000 |
| GRANTOR: PONCE DAVID N & MITZI | | | | | | |
| GRANTEE: CAYLESS JUSTIN & BR | | | | | | |
| 2159/0450 | 11/22/2017 | WD | Q | I | 01 | 325,000 |
| GRANTOR: LYNN CHARLES B JR & D | | | | | | |
| GRANTEE: PONCE DAVID N & MIT | | | | | | |

## BUILDING NOTES

## BUILDING DIMENSIONS

BAS=[YR=1999] W4 STP=[YR=1999] N6 W10 S6 E10 $ W24 FSP=[YR=1999] N10 W16 S4 PTO=[YR=1999] W10S6E10N6$S6E16 $ W32 S29 E13 N2 E5 FOP=[YR=1999] S2 E10 N6 W9 S4 W1 $ E1 N4 E9 S10 D3 R3 E9 FGR=[YR=1999] S9 E20 N21 W20 S12 $ N12 E20 N24 $ .

## EXTRA FEATURES

| LN | OB/XF CODE | DESCRIPTION | BLD | CAP | L | W | UNITS | UT | Adj R | ADJ UNIT PRICE | ORIG COND | YEAR ON | YEAR ACTUAL | Q | % COND | OB/XF MKT VALUE | NOTES |
|---|---|---|---|---|---|---|---|---|---|---|---|---|---|---|---|---|---|
| 4 | 0351 | CARPORT MT | 0 | 0 | 17 | 11 | 187.00 | SF | 10.00 | 10.00 | 100 | 2007 | 2007 | 3 | 24 | 449 | |

## LAND DESCRIPTION

TOTAL OB/XF 449

| LN | USE CODE | CLS | LAND USE DESCRIPTION | CAP | RD | LOC ZONE | FRONT | DEPTH | TOT LND UTS | UNIT TYPE | DT | DPTH FACT | % COND | TOT ADJ | UNIT PRICE | ADJ UNIT PRICE | LAND VALUE | OTHER ADJUSTMENTS AND NOTES | YEAR | DENSITY | DECL | FRZ | YR | CONSRV |
|---|---|---|---|---|---|---|---|---|---|---|---|---|---|---|---|---|---|---|---|---|---|---|---|---|
| 1 | 000100 | C | RES | 0 | | RSF-2 | 0.00 | 0.00 | 1.00 | LT | | 1.00 | 1.00 | 1.00 | 225,000.00 | 225,000.00 | 225,000 | | | | | | | |

REVIEW DATE 01/31/2024 BY KBA Total Acres: 0.00 Total Land Value: 225,000 Market: 0 Agricultural: 0 Common: 225,000 PRINTED 07/09/2026 BY SYS