LOT 25
PDSTRIAN ESMT PT OR 1179/1730
ISLESWORTH PB 6/300

DUKE CHARLES F & JOANNE M L/E/
96152 MONTEGO BAY
FERNANDINA BEACH, FL 32034

2026

00-00-30-0315-0025-0000

NASSAU COUNTY PROPERTY

BUILDING CHARACTERISTICS

ELEMENT	CD	CONSTRUCTION
Exterior Wall	16	WD FR STUC 100
Roof Structur	03	GABLE/HIP 100
Roof Cover	03	COMP SHNGL 100
Interior Wall	05	DRYWALL 100
Interior Floo	11	CLAY TILE 60
Interior Floo	14	CARPET 40
Air Condition	03	CENTRAL 100
Heating Type	04	AIR DUCTED 100
Bedrooms		4 100
Bathrooms		3 100
Frame	02	WOOD FRAME 100
Stories	2.	2. 100
Units		0 100
Occupancy	00	NONE 100
Quality	03	Quality Level 03
DOR CODE	0100	SINGLE FAMILY
MAP NUM		MKT AREA 02
NEIGHBORHOOD/LOC	2027.00	

AREA TYPE	TOTAL GROSS AREA	PCT OF BASE	YEAR	TOT ADJ AREA	SUBAREA MARKET VALUE
BAS	1,252	100	2003	1,252	175,154
FGR	424	55	2003	233	32,596
FOP	72	30	2003	22	3,078
FSP	150	40	2003	60	8,394
FUS	894	100	2003	894	125,070
PTO	15	5	2003	1	140
PTO	16	5	2003	1	140
PTO	30	5	2003	2	279
TOTALS	2,853			2,465	344,851

MARKET ADJUSTMENTS

TYPE	MDL	EFF. AREA	TOT ADJ PTS	EFF. BASE RATE	REPL. COST NEW	AYB	EYB	ECON	FNCT		NORM	% COND
0900	01	2,465	113.0880	157.19	387,473	2003	2003	0	0	0	11.00	89.00

1 SNGL FAM 100% - 2004 Heated Area: 2146 HX Base Yr 2004

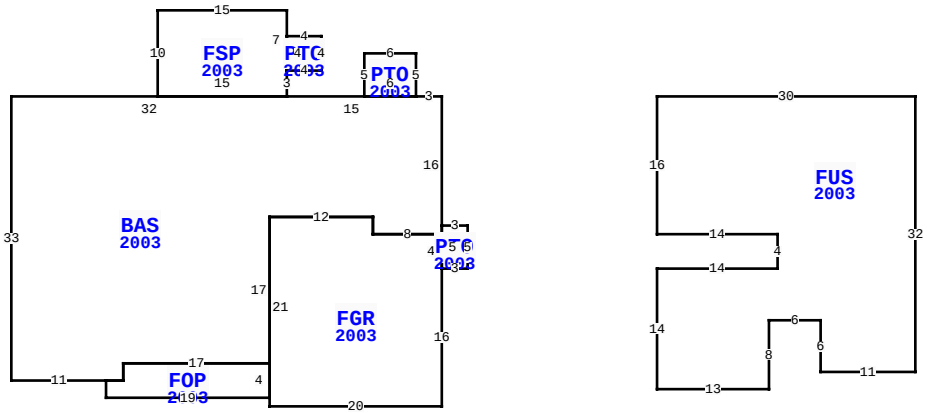

96152 MONTEGO BAY, FERNANDINA BEACH

BLD DATE		LGL DATE	
XF DATE		LAND DATE	03/27/2026 MLU
INC DATE		AG DATE	

NASSAU COUNTY PROPERTY — VALUATION SUMMARY

VALUATION BY		STANDARD
Tax Group: 8	Tax Dist:	
BUILDING MARKET VALUE		344,851
TOTAL MARKET OB/XF VALUE		2,975
TOTAL LAND VALUE - MARKET		250,000
TOTAL MARKET VALUE		597,826
SOH/AGL Deduction		343,115
ASSESSED VALUE		254,711
TOTAL EXEMPTION VALUE	HX HB	51,411
BASE TAXABLE VALUE		203,300
TOTAL JUST VALUE		597,826
NCON VALUE		0
INCOME VALUE		
PREVIOUS YEAR MKT VALUE		600,739

PERMIT NUM	DESCRIPTION	AMT	ISSUED
R035184	REPAIR/RRF	1,500	06/01/2003
B0363288	NEW CONSTR	158,548	05/01/2003

SALES DATA

OFF RECORD Number	DATE	TYPE INST	Q / U	V / I	RSN CD	SALE PRICE
2584/0262	8/11/2022	LE	U	I	11	100
GRANTOR: DUKE CHARLES F & JOAN						
GRANTEE: DUKE KATHARINE ELIZ						
1199/1527	1/06/2004	WD	U	I	21	274,500
GRANTOR: WATSON HOME BUILDERS						
GRANTEE: DUKE CHARLES F & JO						

BUILDING NOTES

BUILDING DIMENSIONS

BAS=[YR=2003] W3 PTO=[YR=2003] N5 W6 S5 E6 $ W15
FSP=[YR=2003] N3 PTO=[YR=2003] E4 N4 W4 S4$ N7 W15 S10 E15$
W32 S33 E11 FOP=[YR=2003] S2 E19 FGR=[YR=2003] S1 E20 N16
PTO=[YR=2003] E3 N5 W3 S5$ N4 W8 N2 W12 S21$ N4 W17 S2 W2 $
E2 N2 E17 N17 E12 S2 E8 N16$ PTR=E25 FUS=[YR=2003] E30 S32
W11 N6 W6 S8 W13 N14 E14 N4 W14 N16$ W25$.

EXTRA FEATURES

LN	OB/XF CODE	DESCRIPTION	BLD	CAP	L	W	UNITS	UT	Adj R	ADJ UNIT PRICE	ORIG COND	YEAR ON	YEAR ACTUAL	Q	% COND	OB/XF MKT VALUE	NOTES
1	0500	FP-PRE FAB	0	100	0	0	1.00	UT	3,500.00	3,500.00	100	2003	2003	3	85	2,975	

LAND DESCRIPTION

TOTAL OB/XF 2,975

LN	USE CODE	CLS	LAND USE DESCRIPTION	CAP	RD	LOC ZONE	FRONT	DEPTH	TOT LND UTS	UNIT TYPE	DT	DPTH FACT	% COND	TOT ADJ	UNIT PRICE	ADJ UNIT PRICE	LAND VALUE	OTHER ADJUSTMENTS AND NOTES	YEAR	DENSITY	DECL	FRZ	YR	CONSRV
1	000134	C	RES POND	100		RSF-2	0.00	0.00	1.00	LT		1.00	1.00	1.00	250,000.00	250,000.00	250,000							

REVIEW DATE 01/31/2024 BY KBA Total Acres: 0.00 Total Land Value: 250,000 Market: 0 Agricultural: 0 Common: 250,000 PRINTED 07/09/2026 BY SYS