LOT 18
PDSTRIAN ESMT PT OR 1179/1730
ISLESWORTH PB 6/300

SPRATTO MILES ANTHONY & SINEAD
96061 JAMAICAN CT
FERNANDINA BEACH, FL 32034

**2026**

**00-00-30-0315-0018-0000**

## NASSAU COUNTY PROPERTY



## BUILDING CHARACTERISTICS

| ELEMENT | CD | CONSTRUCTION |
|---|---|---|
| Exterior Wall | 16 | WD FR STUC 100 |
| Roof Structur | 03 | GABLE/HIP 100 |
| Roof Cover | 03 | COMP SHNGL 100 |
| Interior Wall | 05 | DRYWALL 100 |
| Interior Floo | 14 | CARPET 70 |
| Interior Floo | 11 | CLAY TILE 30 |
| Air Condition | 03 | CENTRAL 100 |
| Heating Type | 04 | AIR DUCTED 100 |
| Bedrooms | | 5 100 |
| Bathrooms | | 3.5 100 |
| Frame | 02 | WOOD FRAME 100 |
| Stories | 2. | 2. 100 |
| Units | | 0 100 |
| Occupancy | 00 | NONE 100 |
| Quality | 03 | Quality Level 03 |
| DOR CODE | 0100 | SINGLE FAMILY |
| MAP NUM | | MKT AREA 02 |
| NEIGHBORHOOD/LOC | 2027.00 | |

| AREA TYPE | TOTAL GROSS AREA | PCT OF BASE | YEAR | TOT ADJ AREA | SUBAREA MARKET VALUE |
|---|---|---|---|---|---|
| BAS | 1,568 | 100 | 2004 | 1,568 | 208,848 |
| FGR | 483 | 55 | 2004 | 266 | 35,429 |
| FOP | 35 | 30 | 2004 | 10 | 1,332 |
| FSP | 236 | 40 | 2011 | 94 | 12,520 |
| FUS | 1,061 | 100 | 2004 | 1,061 | 141,319 |
| TOTALS | 3,383 | | | 2,999 | 399,448 |

## MARKET ADJUSTMENTS

| TYPE | MDL | EFF. AREA | TOT ADJ PTS | EFF. BASE RATE | REPL. COST NEW | AYB | EYB | ECON | FNCT | | NORM | % COND |
|---|---|---|---|---|---|---|---|---|---|---|---|---|
| 0900 | 01 | 2,999 | 107.0660 | 148.82 | 446,311 | 2004 | 2004 | 0 | 0 | 0 | 10.50 | 89.50 |

1 SNGL FAM 100% - 2024 Heated Area: 2629 HX Base Yr 2024

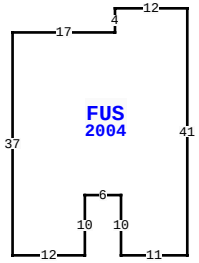


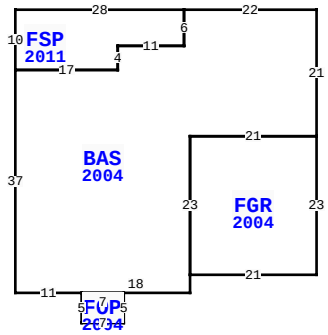


96061 JAMAICAN CT, FERNANDINA BEACH

| | | | |
|---|---|---|---|
| BLD DATE | 03/03/2023 NW | LGL DATE | |
| XF DATE | | LAND DATE | 04/29/2025 MLU |
| INC DATE | | AG DATE | |

## VALUATION SUMMARY

| | | |
|---|---|---|
| VALUATION BY | | STANDARD |
| Tax Group: 8 | Tax Dist: | |
| BUILDING MARKET VALUE | | 399,448 |
| TOTAL MARKET OB/XF VALUE | | 3,010 |
| TOTAL LAND VALUE - MARKET | | 250,000 |
| TOTAL MARKET VALUE | | 652,458 |
| SOH/AGL Deduction | | 211,334 |
| ASSESSED VALUE | | 441,124 |
| TOTAL EXEMPTION VALUE | HX HB | 51,411 |
| BASE TAXABLE VALUE | | 389,713 |
| TOTAL JUST VALUE | | 652,458 |
| NCON VALUE | | 0 |
| INCOME VALUE | | |
| PREVIOUS YEAR MKT VALUE | | 637,131 |

| PERMIT NUM | DESCRIPTION | AMT | ISSUED |
|---|---|---|---|
| B250002771 | 19'6" X 9'8" SCRN | 6,355 | 03/18/2025 |
| B0412340 | NEW CONSTR | 273,570 | 02/01/2004 |

## SALES DATA

| OFF RECORD Number | DATE | TYPE INST | Q U | V I | RSN CD | SALE PRICE |
|---|---|---|---|---|---|---|
| 2645/1938 | 5/16/2023 | WD | Q | I | 02 | 739,000 |
| GRANTOR: BUCK SARAH H | | | | | | |
| GRANTEE: SPRATTO MILES ANTHO | | | | | | |
| 2292/0289 | 7/19/2019 | WD | Q | I | 01 | 410,000 |
| GRANTOR: ARCENEAUX VICTOR J & | | | | | | |
| GRANTEE: BUCK SARAH H | | | | | | |

## BUILDING NOTES

## BUILDING DIMENSIONS

BAS=[YR=2004] W22 FSP=[YR=2011] W28 S10 E17 N4 E11 N6$ S6 W11 S4 W17 S37 E11 FOP=[YR=2004] S5 E7 N5 W7$ E18 N3
FGR=[YR=2004] E21 N23 W21 S23 $ N23 E21 N21$ PTR=N15
FUS=[YR=2004] N37 E17 N4 E12 S41 W11 N10 W6 S10 W12$ S15$ .

## EXTRA FEATURES

| LN | OB/XF CODE | DESCRIPTION | BLD | CAP | L | W | UNITS | UT | Adj R | ADJ UNIT PRICE | ORIG COND | YEAR ON | YEAR ACTUAL | Q | % COND | OB/XF MKT VALUE | NOTES |
|---|---|---|---|---|---|---|---|---|---|---|---|---|---|---|---|---|---|
| 1 | 0500 | FP-PRE FAB | 0 | 100 | 0 | 0 | 1.00 | UT | 3,500.00 | 3,500.00 | 100 | 2004 | 2004 | 3 | 86 | 3,010 | |

## LAND DESCRIPTION

TOTAL OB/XF 3,010

| LN | USE CODE | CLS | LAND USE DESCRIPTION | CAP | RD | LOC ZONE | FRONT | DEPTH | TOT LND UTS | UNIT TYPE | DT | DPTH FACT | % COND | TOT ADJ | UNIT PRICE | ADJ UNIT PRICE | LAND VALUE | OTHER ADJUSTMENTS AND NOTES | YEAR | DENSITY | DECL | FRZ | YR | CONSRV |
|---|---|---|---|---|---|---|---|---|---|---|---|---|---|---|---|---|---|---|---|---|---|---|---|---|
| 1 | 000100 | C | RES | 100 | | RSF-2 | 0.00 | 0.00 | 1.00 | LT | | 1.00 | 1.00 | 1.00 | 250,000.00 | 250,000.00 | 250,000 | | | | | | | |

REVIEW DATE 07/10/2025 BY HS Total Acres: 0.00 Total Land Value: 250,000 Market: 0 Agricultural: 0 Common: 250,000 PRINTED 07/09/2026 BY SYS