LOT 60
IN OR 2327/1520
EGANS LANDING PB 5/387-387B

MACWITHEY RICHARD & THERESA
2932 ROBERT OLIVER AVE
FERNANDINA BEACH, FL 32034

2026

00-00-30-021L-0060-0000

NASSAU COUNTY PROPERTY

BUILDING CHARACTERISTICS

ELEMENT	CD	CONSTRUCTION
Exterior Wall	16	WD FR STUC 100
Roof Structur	03	GABLE/HIP 100
Roof Cover	03	COMP SHNGL 100
Interior Wall	05	DRYWALL 100
Interior Floo	14	CARPET 60
Interior Floo	11	CLAY TILE 40
Air Condition	03	CENTRAL 100
Heating Type	04	AIR DUCTED 100
Bedrooms		4 100
Bathrooms		2.5 100
Frame	02	WOOD FRAME 100
Stories	1.5	1.5 100
Units		0 100
Occupancy	00	NONE 100
Quality	03	Quality Level 03
DOR CODE	0100	SINGLE FAMILY
MAP NUM		MKT AREA 01
NEIGHBORHOOD/LOC	1076.00	

AREA TYPE	TOTAL GROSS AREA	PCT OF BASE	YEAR	TOT ADJ AREA	SUBAREA MARKET VALUE
BAS	1,700	100	1996	1,700	221,499
FEP	230	80	1996	184	23,974
FGR	504	55	1996	277	36,091
FOP	24	30	1996	7	912
FOP	30	30	1996	9	1,173
FST	24	55	1996	13	1,694
FUS	309	100	1996	309	40,261
TOTALS	2,821			2,499	325,604

MARKET ADJUSTMENTS

TYPE	MDL	EFF. AREA	TOT ADJ PTS	EFF. BASE RATE	REPL. COST NEW	AYB	EYB	ECON	FNCT		NORM	% COND
0900	01	2,499	109.6320	152.39	380,823	1996	1996	0	0	0	14.50	85.50

1 SNGL FAM 100% - 2020 Heated Area: 2009 HX Base Yr 2020

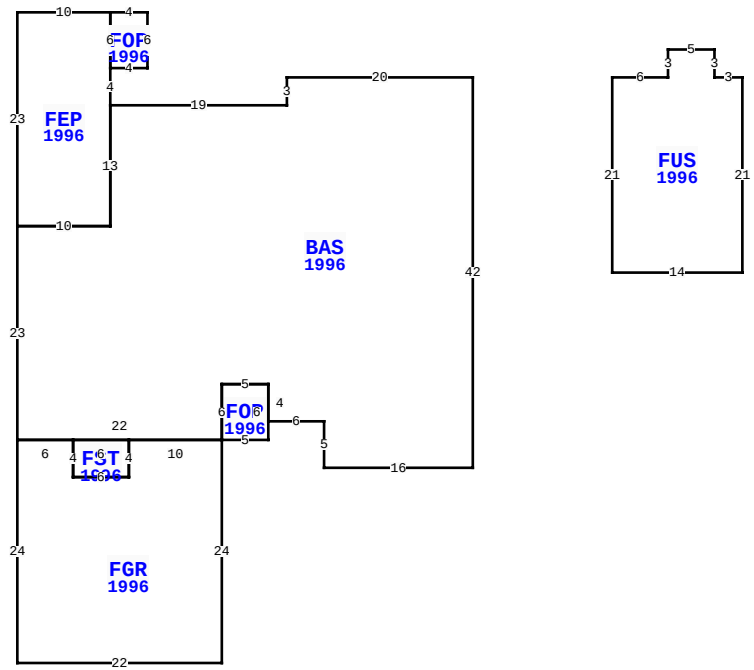

2932 ROBERT OLIVER AVE, FERNANDINA BEACH

BLD DATE		LGL DATE	
XF DATE		LAND DATE	
INC DATE		AG DATE	

VALUATION SUMMARY

VALUATION BY		STANDARD
Tax Group: 2	Tax Dist:	
BUILDING MARKET VALUE		325,604
TOTAL MARKET OB/XF VALUE		2,660
TOTAL LAND VALUE - MARKET		350,000
TOTAL MARKET VALUE		678,264
SOH/AGL Deduction		288,449
ASSESSED VALUE		389,815
TOTAL EXEMPTION VALUE	HX HB	51,411
BASE TAXABLE VALUE		338,404
TOTAL JUST VALUE		678,264
NCON VALUE		0
INCOME VALUE		
PREVIOUS YEAR MKT VALUE		718,742

PERMIT NUM	DESCRIPTION	AMT	ISSUED
20100204	H/AC	5,000	02/02/2010
B012465	REMODEL	5,000	11/21/2001
B969797	NEW CONSTR	100,496	05/03/1996

SALES DATA

OFF RECORD Number	DATE	TYPE INST	Q / U	V / I	RSN CD	SALE PRICE
2327/1520	12/23/2019	WD	Q	I	01	480,000
GRANTOR: SMITH RICHARD A & JUL						
GRANTEE: MACWITHEY RICHARD &						
0769/1965	9/03/1996	WD	Q	I		155,500
GRANTOR: ALMAND DORIS J						
GRANTEE: SMITH RICHARD A & J						

BUILDING NOTES

BUILDING DIMENSIONS

BAS=[YR=1996] W20 S3 W19 FEP=[YR=1996] N4 FOP=[YR=1996] E4 N6 W4 S6$ N6 W10 S23 E10 N13$ S13 W10 S23 FGR=[YR=1996] S24 E22 N24 FOP=[YR=1996] E5 N6 W5 S6$ W10 FST=[YR=1996] W6 S4 E6 N4$ S4 W6 N4 W6$ E22 N6 E5 S4 E6 S5 E16 N42$ PTR=E15 FUS=[YR=1996] E6 N3 E5 S3 E3 S21 W14 N21$ W15$.

EXTRA FEATURES

LN	OB/XF CODE	DESCRIPTION	BLD	CAP	L	W	UNITS	UT	Adj R	ADJ UNIT PRICE	ORIG COND	YEAR ON	YEAR ACTUAL	Q	% COND	OB/XF MKT VALUE	NOTES
1	0500	FP-PRE FAB	0	100	0	0	1.00	UT	3,500.00	3,500.00	100	1996	1996	3	76	2,660	

LAND DESCRIPTION

TOTAL OB/XF 2,660

LN	USE CODE	CLS	LAND USE DESCRIPTION	CAP	RD	LOC ZONE	FRONT	DEPTH	TOT LND UTS	UNIT TYPE	DT	DPTH FACT	% COND	TOT ADJ	UNIT PRICE	ADJ UNIT PRICE	LAND VALUE	OTHER ADJUSTMENTS AND NOTES	YEAR	DENSITY	DECL	FRZ	YR	CONSRV
1	000100	C	RES	100	0003	R-2	0.00	0.00	1.00	LT		1.00	1.00	1.00	350,000.00	350,000.00	350,000							

REVIEW DATE 01/01/2023 BY CD Total Acres: 0.00 Total Land Value: 350,000 Market: 0 Agricultural: 0 Common: 350,000 PRINTED 07/09/2026 BY SYS