LOT 99
EGANS BLUFF EAST PB 5/367
PLAT AMENDED IN PB 5/395

YOUNG GRAHAM D & MICHELLE L
2130 CIERA LN
FERNANDINA BEACH, FL 32034

2026

00-00-30-021E-0099-0000

BUILDING CHARACTERISTICS

ELEMENT	CD	CONSTRUCTION
Exterior Wall	05	AVERAGE 100
Roof Structur	03	GABLE/HIP 100
Roof Cover	03	COMP SHNGL 100
Interior Wall	05	DRYWALL 100
Interior Floo	13	LVT/LAMNT 100
Air Condition	03	CENTRAL 100
Heating Type	04	AIR DUCTED 100
Bedrooms		4 100
Bathrooms		2 100
Frame	02	WOOD FRAME 100
Stories	1.	1. 100
Units		0 100
Occupancy	00	NONE 100
Quality	06	Quality Level 06

DOR CODE	0100	SINGLE FAMILY	
MAP NUM		MKT AREA	02
NEIGHBORHOOD/LOC	2026.00		

AREA TYPE	TOTAL GROSS AREA	PCT OF BASE	YEAR	TOT ADJ AREA	SUBAREA MARKET VALUE
BAS	2,193	100	1995	2,193	321,933
FGR	445	55	1995	245	35,966
FOP	87	30	1995	26	3,817
FSP	180	40	1995	72	10,570
PTO	3	5	1995	0	0
PTO	10	5	1995	0	0
USP	180	30	1997	54	7,928
TOTALS	3,098			2,590	380,213

MARKET ADJUSTMENTS

TYPE	MDL	EFF. AREA	TOT ADJ PTS	EFF. BASE RATE	REPL. COST NEW	AYB	EYB	ECON	FNCT		NORM	% COND
0900	01	2,590	117.0240	162.66	421,289	1995	2005	0	0	0	9.75	90.25

1 SNGL FAM 100% - 2025 Heated Area: 2193 HX Base Yr 2025

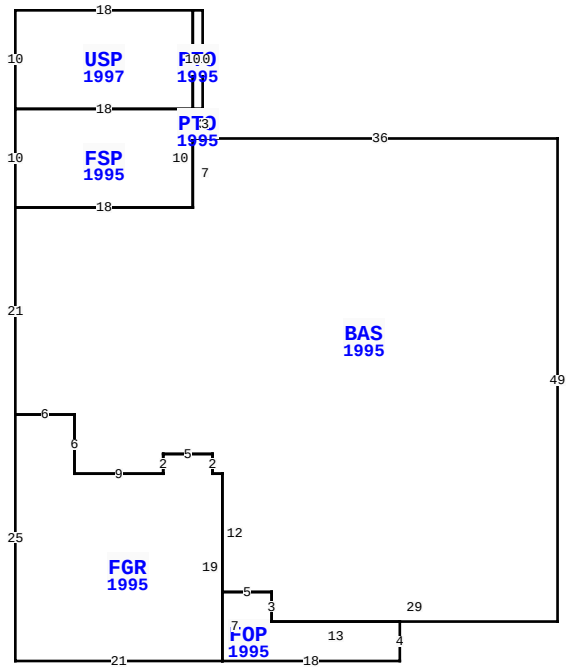

2130 CIERA LN, FERNANDINA BEACH

BLD DATE		LGL DATE	
XF DATE		LAND DATE	
INC DATE		AG DATE	

NASSAU COUNTY PROPERTY

PAGE 1 of 1 8

VALUATION SUMMARY

VALUATION BY		STANDARD
Tax Group: 8	Tax Dist:	
BUILDING MARKET VALUE		380,213
TOTAL MARKET OB/XF VALUE		1,236
TOTAL LAND VALUE - MARKET		180,000
TOTAL MARKET VALUE		561,449
SOH/AGL Deduction		0
ASSESSED VALUE		561,449
TOTAL EXEMPTION VALUE	HX HB	51,411
BASE TAXABLE VALUE		510,038
TOTAL JUST VALUE		561,449
NCON VALUE		0
INCOME VALUE		
PREVIOUS YEAR MKT VALUE		547,175

PERMIT NUM	DESCRIPTION	AMT	ISSUED
B9603523	ADDITION	2,547	12/01/1996
B9502218	XFOB	2,040	09/01/1995
B9501714	NEW CONSTR	114,900	02/01/1995

SALES DATA

OFF RECORD Number	DATE	TYPE INST	Q U	V I	RSN CD	SALE PRICE
2751/1873	11/20/2024	WD	Q	I	02	684,000
GRANTOR: OPENDOOR PROPERTY TRU						
GRANTEE: YOUNG GRAHAM D & MI						
2694/812	2/12/2024	WD	U	I	37	481,700
GRANTOR: LARIOSA AGUSTIN G & B						
GRANTEE: OPENDOOR PROPERTY T						

BUILDING NOTES

BUILDING DIMENSIONS

BAS=[YR=1995] W36 PTO=[YR=1995] N3 PTO=[YR=1995] N10 W1
USP=[YR=1997] W18 S10 FSP=[YR=1995] S10 E18 N10 W18$ E18 N10$
S10 E1$ W1 S3 E1$ W1 S7 W18 S21 FGR=[YR=1995] S25 E21
FOP=[YR=1995] E18 N4 W13 N3 W5 S7 $ N19 W1 N2 W5 S2 W9 N6 W6
$ E6 S6 E9 N2 E5 S2 E1 S12 E5 S3 E29 N49 $.

EXTRA FEATURES

LN	OB/XF CODE	DESCRIPTION	BLD	CAP	L	W	UNITS	UT	Adj R	ADJ UNIT PRICE	ORIG COND	YEAR ON	YEAR ACTUAL	Q	% COND	OB/XF MKT VALUE	NOTES
3	0940	SHEDS/PORT	0	100	10	12	120.00	SF	30.00	30.00	100	1997	1997	3	20	720	
4	1076	TRELLIS A	0	100	9	9	81.00	SF	7.50	7.50	100	1997	1997	3	85	516	

LAND DESCRIPTION

TOTAL OB/XF 1,236

LN	USE CODE	CLS	LAND USE DESCRIPTION	CAP	RD	LOC ZONE	FRONT	DEPTH	TOT LND UTS	UNIT TYPE	DT	DPTH FACT	% COND	TOT ADJ	UNIT PRICE	ADJ UNIT PRICE	LAND VALUE	OTHER ADJUSTMENTS AND NOTES	YEAR	DENSITY	DECL	FRZ	YR	CONSRV
1	000100	C	RES	100	0003	RSF-2	0.00	0.00	1.00	LT		1.00	1.00	1.00	180,000.00	180,000.00	180,000							

REVIEW DATE 01/01/2023 BY CD Total Acres: 0.00 Total Land Value: 180,000 Market: 0 Agricultural: 0 Common: 180,000 PRINTED 07/09/2026 BY SYS