LOT 86
EGANS BLUFF EAST PB 5/367
PLAT AMENDED IN PB 5/395

BANNISTER JEFFREY A & DEBORAH
2156 LUMINA CT
FERNANDINA BEACH, FL 32034

2026

00-00-30-021E-0086-0000

BUILDING CHARACTERISTICS

ELEMENT	CD	CONSTRUCTION
Exterior Wall	10	ABOVE AVG 70
Exterior Wall	16	WD FR STUC 30
Roof Structur	03	GABLE/HIP 100
Roof Cover	03	COMP SHNGL 100
Interior Wall	05	DRYWALL 100
Interior Floo	14	CARPET 80
Interior Floo	11	CLAY TILE 20
Air Condition	03	CENTRAL 100
Heating Type	04	AIR DUCTED 100
Bedrooms		3 100
Bathrooms		2.5 100
Frame	02	WOOD FRAME 100
Stories	2.	2. 100
Units		0 100
Occupancy	00	NONE 100
Quality	06	Quality Level 06
DOR CODE	0100	SINGLE FAMILY
MAP NUM		MKT AREA 02
NEIGHBORHOOD/LOC	2026.00	

AREA TYPE	TOTAL GROSS AREA	PCT OF BASE	YEAR	TOT ADJ AREA	SUBAREA MARKET VALUE
BAS	818	100	1994	818	123,764
FGR	441	55	1994	243	36,766
FOP	66	30	1994	20	3,026
FUS	794	100	1994	794	120,133
PTO	78	5	1994	4	605
UOP	96	20	1994	19	2,875
TOTALS	2,293			1,898	287,170

MARKET ADJUSTMENTS

TYPE	MDL	EFF. AREA	TOT ADJ PTS	EFF. BASE RATE	REPL. COST NEW	AYB	EYB	ECON	FNCT		NORM	% COND
0900	01	1,898	128.0272	177.96	337,768	1994	1994	0	0	0	14.98	85.02

1 SNGL FAM 100% - 2019 Heated Area: 1612 HX Base Yr 2019

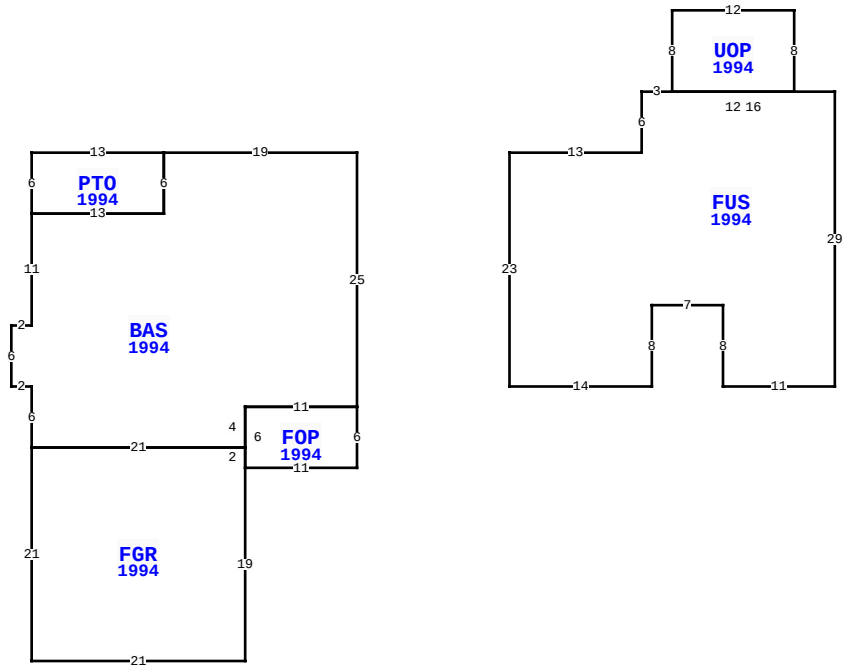

2156 LUMINA CT, FERNANDINA BEACH

BLD DATE	03/03/2023 NW	LGL DATE	
XF DATE		LAND DATE	
INC DATE		AG DATE	

NASSAU COUNTY PROPERTY

PAGE 1 of 1 8

VALUATION SUMMARY

VALUATION BY		STANDARD
Tax Group: 8	Tax Dist:	
BUILDING MARKET VALUE		287,170
TOTAL MARKET OB/XF VALUE		1,440
TOTAL LAND VALUE - MARKET		180,000
TOTAL MARKET VALUE		468,610
SOH/AGL Deduction		184,182
ASSESSED VALUE		284,428
TOTAL EXEMPTION VALUE	HX HB	51,411
BASE TAXABLE VALUE		233,017
TOTAL JUST VALUE		468,610
NCON VALUE		0
INCOME VALUE		
PREVIOUS YEAR MKT VALUE		458,136

PERMIT NUM	DESCRIPTION	AMT	ISSUED
B00990	NEW CONSTR	118,300	05/03/1994

SALES DATA

OFF RECORD Number	DATE	TYPE INST	Q / U	V / I	RSN CD	SALE PRICE
1918/1809	5/22/2014	WD	Q	I	01	242,000
GRANTOR: ELLIOTT MARTIN E & RO						
GRANTEE: BANNISTER JEFFREY A						
1562/1667	4/24/2008	QC	U	I	18	100
GRANTOR: ELLIOTT MARTIN E & RO						
GRANTEE: ELLIOTT MARTIN E &						

BUILDING NOTES

BUILDING DIMENSIONS

BAS=[YR=1994] W19 PTO=[YR=1994] W13 S6 E13 N6 $ S6 W13 S11 W2 S6 E2 S6 FGR=[YR=1994] S21 E21 N19 FOP=[YR=1994] E11 N6 W11 S6 $ N2 W21 $ E21 N4 E11 N25 $ PTR= E15 FUS=[YR=1994] E13 N6 E3 UOP=[YR=1994] N8 E12 S8 W12 $ E16 S29 W11 N8 W7 S8 W14 N23 $ W15 $.

EXTRA FEATURES

LN	OB/XF CODE	DESCRIPTION	BLD	CAP	L	W	UNITS	UT	Adj R	ADJ UNIT PRICE	ORIG COND	YEAR ON	YEAR ACTUAL	Q	% COND	OB/XF MKT VALUE	NOTES
1	0504	FP-ELECTRI	0	100	0	0	1.00	UT	2,000.00	2,000.00	100	1994	1994	3	72	1,440	

LAND DESCRIPTION

TOTAL OB/XF 1,440

LN	USE CODE	CLS	LAND USE DESCRIPTION	CAP	RD	LOC ZONE	FRONT	DEPTH	TOT LND UTS	UNIT TYPE	DT	DPTH FACT	% COND	TOT ADJ	UNIT PRICE	ADJ UNIT PRICE	LAND VALUE	OTHER ADJUSTMENTS AND NOTES	YEAR	DENSITY	DECL	FRZ	YR	CONSRV
1	000100	C	RES	100	0003	RSF-2	0.00	0.00	1.00	LT		1.00	1.00	1.00	180,000.00	180,000.00	180,000							

REVIEW DATE 01/01/2023 BY CD Total Acres: 0.00 Total Land Value: 180,000 Market: 0 Agricultural: 0 Common: 180,000 PRINTED 07/09/2026 BY SYS