LOT 43
EGANS BLUFF #1 PB 5/93

WESLEY NORMAN L/E/
3110 EGANS BLUFF RD
FERNANDINA BEACH, FL 32034

2026

00-00-30-021A-0043-0000

BUILDING CHARACTERISTICS

ELEMENT	CD	CONSTRUCTION
Exterior Wall	12	CEDAR 100
Roof Structur	03	GABLE/HIP 100
Roof Cover	03	COMP SHNGL 100
Interior Wall	05	DRYWALL 100
Interior Floo	14	CARPET 70
Interior Floo	13	LVT/LAMNT 30
Air Condition	03	CENTRAL 100
Heating Type	04	AIR DUCTED 100
Bedrooms		3 100
Bathrooms		2 100
Frame	02	WOOD FRAME 100
Stories	1.	1. 100
Units		0 100
BUD8 Adjustme	05	DIST 1A 100
Occupancy	00	NONE 100
Quality	06	Quality Level 06
DOR CODE	0100	SINGLE FAMILY
MAP NUM		MKT AREA 02
NEIGHBORHOOD/LOC	2031.00	

AREA TYPE	TOTAL GROSS AREA	PCT OF BASE	YEAR	TOT ADJ AREA	SUBAREA MARKET VALUE
BAS	1,795	100	1993	1,795	243,871
BAS	115	100	2012	115	15,624
BAS	540	100	2012	540	73,365
FEP	200	80	2002	160	21,738
FGR	391	55	1993	215	29,210
FUS	140	100	1993	140	19,020
STP	52	10	2008	5	679
UOP	66	20	1993	13	1,766
TOTALS	3,299			2,983	405,273

MARKET ADJUSTMENTS

TYPE	MDL	EFF. AREA	TOT ADJ PTS	EFF. BASE RATE	REPL. COST NEW	AYB	EYB	ECON	FNCT		NORM	% COND
0900	01	2,983	118.4776	164.68	491,240	1986	1990	0	0	0	17.50	82.50

1 SNGL FAM 100% - 2008 Heated Area: 2590 HX Base Yr 2008

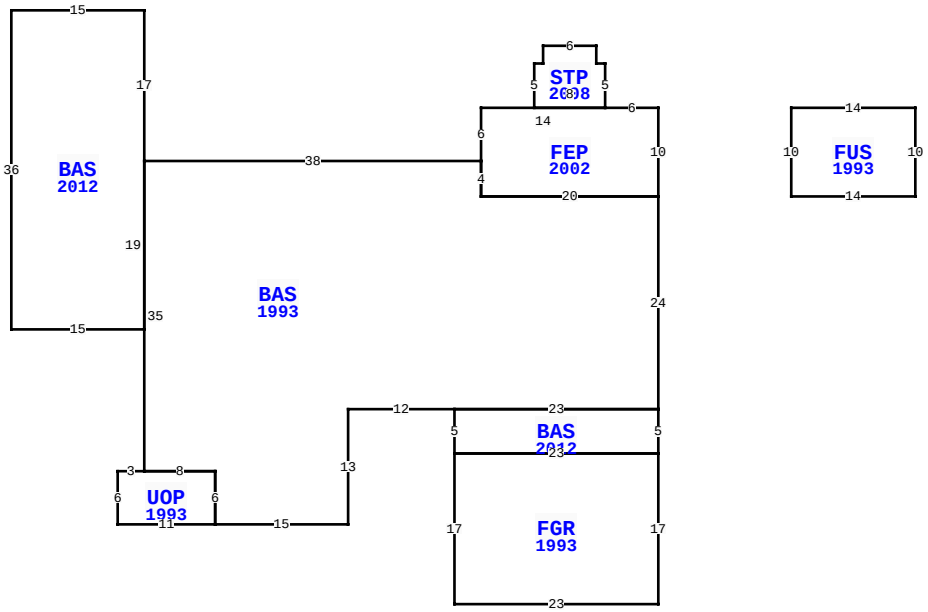

3110 EGANS BLUFF RD, FERNANDINA BEACH

BLD DATE		LGL DATE	
XF DATE		LAND DATE	
INC DATE		AG DATE	

NASSAU COUNTY PROPERTY

PAGE 1 of 1 8

VALUATION SUMMARY

VALUATION BY		STANDARD
Tax Group: 8	Tax Dist:	
BUILDING MARKET VALUE		405,273
TOTAL MARKET OB/XF VALUE		2,595
TOTAL LAND VALUE - MARKET		275,000
TOTAL MARKET VALUE		682,868
SOH/AGL Deduction		354,904
ASSESSED VALUE		327,964
TOTAL EXEMPTION VALUE	HX HB WR	56,411
BASE TAXABLE VALUE		271,553
TOTAL JUST VALUE		682,868
NCON VALUE		0
INCOME VALUE		
PREVIOUS YEAR MKT VALUE		673,991

PERMIT NUM	DESCRIPTION	AMT	ISSUED
G01757	GAS	0	06/01/2012
M17329	H/AC	0	06/01/2012
B0108994	ADDITION	24,980	11/01/2001
B0108884	XFOB	5,000	10/01/2001

SALES DATA

OFF RECORD Number	DATE	TYPE INST	Q / U	V / I	RSN CD	SALE PRICE
2707/1569	4/24/2024	LE	U	I	11	100
GRANTOR: WESLEY NORMAN & MARIL						
GRANTEE: HAYES JEREMY THOMAS						
1433/0659	7/31/2006	WD	Q	I		389,500
GRANTOR: HARLAND JOHN R & SUZA						
GRANTEE: WESLEY NORMAN & MAR						

BUILDING NOTES

BUILDING DIMENSIONS

FEP=[YR=2002] W6 STP=[YR=2008] N5 W1 N2 W6 S2 W1 S5 E8$ W14 S6 BAS=[YR=1993] W38 BAS=[YR=2012] N17 W15 S36 E15 N19$ S35 UOP=[YR=1993] W3 S6 E11 N6 W8 $E8 S6 E15 N13 E12 BAS=[YR=2012] S5 FGR=[YR=1993] S17E23 N17 W23 $ E23 N5 W23$ E23 N24 W20 N4 $S4 E20 N10 $ PTR= E15 FUS=[YR=1993] E14 S10 W14 N10 $ W15 $.

EXTRA FEATURES

LN	OB/XF CODE	DESCRIPTION	BLD	CAP	L	W	UNITS	UT	Adj R	ADJ UNIT PRICE	ORIG COND	YEAR ON	YEAR ACTUAL	Q	% COND	OB/XF MKT VALUE	NOTES
1	0500	FP-PRE FAB	0	100	0	0	1.00	UT	3,500.00	3,500.00	100	1986	1986	3	56	1,960	
5	1242	WD DECK A	0	100	0	0	141.00	SF	10.00	10.00	100	2012	2012	3	45	635	

LAND DESCRIPTION

TOTAL OB/XF 2,595

LN	USE CODE	CLS	LAND USE DESCRIPTION	CAP	RD	LOC ZONE	FRONT	DEPTH	TOT LND UTS	UNIT TYPE	DT	DPTH FACT	% COND	TOT ADJ	UNIT PRICE	ADJ UNIT PRICE	LAND VALUE	OTHER ADJUSTMENTS AND NOTES	YEAR	DENSITY	DECL	FRZ	YR	CONSRV
1	000100	C	RES	100		RSF-2	0.00	0.00	1.00	LT		1.00	1.00	1.00	275,000.00	275,000.00	275,000							

REVIEW DATE 01/01/2023 BY CD Total Acres: 0.00 Total Land Value: 275,000 Market: 0 Agricultural: 0 Common: 275,000 PRINTED 07/09/2026 BY SYS