LOT 10
AZALEA POINTE PB 6/164-165

LOGAN JULIE
34 HICKORY RIDGE LN
WHEELERSBURG, OH 45694

2026

00-00-30-0131-0010-0000

BUILDING CHARACTERISTICS

ELEMENT	CD	CONSTRUCTION
Exterior Wall	16	WD FR STUC 100
Roof Structur	03	GABLE/HIP 100
Roof Cover	03	COMP SHNGL 100
Interior Wall	05	DRYWALL 100
Interior Floo	11	CLAY TILE 50
Interior Floo	14	CARPET 50
Air Condition	03	CENTRAL 100
Heating Type	04	AIR DUCTED 100
Bedrooms		4 100
Bathrooms		3 100
Frame	02	WOOD FRAME 100
Stories	2.	2. 100
Units		0 100
Occupancy	00	NONE 100
Quality	04	Quality Level 04
DOR CODE	0100	SINGLE FAMILY
MAP NUM		MKT AREA 03
NEIGHBORHOOD/LOC	3030.00	

AREA TYPE	TOTAL GROSS AREA	PCT OF BASE	YEAR	TOT ADJ AREA	SUBAREA MARKET VALUE
BAS	2,406	100	2002	2,406	327,360
FGR	516	55	2002	284	38,641
FOP	81	30	2002	24	3,266
FOP	184	30	2002	55	7,484
FUS	311	100	2002	311	42,315
STP	12	10	2002	1	136
TOTALS	3,510			3,081	419,201

MARKET ADJUSTMENTS

TYPE	MDL	EFF. AREA	TOT ADJ PTS	EFF. BASE RATE	REPL. COST NEW	AYB	EYB	ECON	FNCT		NORM	% COND
0900	01	3,081	110.6070	153.74	473,673	2002	2002	0	0	0	11.50	88.50

1 SNGL FAM 0% - 0 Heated Area: 2717 HX Base Yr

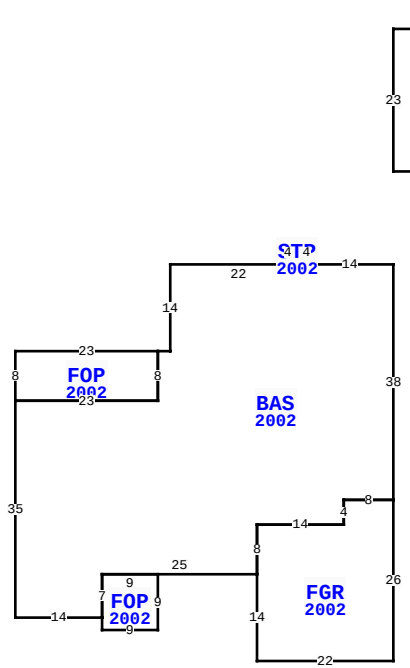

9574 HILDRETH LN, FERNANDINA BEACH

BLD DATE		LGL DATE	
XF DATE		LAND DATE	04/01/2026 MLU
INC DATE		AG DATE	

NASSAU COUNTY PROPERTY

PAGE 1 of 1 8

VALUATION SUMMARY

VALUATION BY	STANDARD
Tax Group: 8	Tax Dist:
BUILDING MARKET VALUE	419,201
TOTAL MARKET OB/XF VALUE	54,771
TOTAL LAND VALUE - MARKET	325,000
TOTAL MARKET VALUE	798,972
SOH/AGL Deduction	0
ASSESSED VALUE	798,972
TOTAL EXEMPTION VALUE	0
BASE TAXABLE VALUE	798,972
TOTAL JUST VALUE	798,972
NCON VALUE	0
INCOME VALUE	
PREVIOUS YEAR MKT VALUE	772,466

PERMIT NUM	DESCRIPTION	AMT	ISSUED
B1429656	SCRNENCL	11,000	12/01/2014
B0108687	NEW CONSTR	204,960	08/01/2001

SALES DATA

OFF RECORD Number	DATE	TYPE INST	Q U /	V I /	RSN CD	SALE PRICE
2364/1132	5/28/2020	WD	U	I	11	100
GRANTOR: LOGAN-AMELIA ISLAND L						
GRANTEE: LOGAN JULIE						
1908/0707	2/27/2014	QC	U	I	11	100
GRANTOR: LOGAN JULIE A TRUSTEE						
GRANTEE: LOGAN-AMELIA ISLAND						

BUILDING NOTES

BUILDING DIMENSIONS

BAS=[YR=2002] W14 STP=[YR=2002] N4 W3 S4 E3$ W22 S14 W2 FOP=[YR=2002] W23 S8 E23 N8$ S8 W23 S35 E14 FOP=[YR=2002] S2 E9 N9 W9 S7$ N7 E25 FGR=[YR=2002] S14 E22 N26 W8 S4 W14 S8$ N8 E14 N4 E8 N38$ PTR=N15 FUS=[YR=2002] N23 E9 N3 E4 S26 W13$ S15$.

EXTRA FEATURES

LN	OB/XF CODE	DESCRIPTION	BLD	CAP	L	W	UNITS	UT	Adj R	ADJ UNIT PRICE	ORIG COND	YEAR ON	YEAR ACTUAL	Q	% COND	OB/XF MKT VALUE	NOTES
1	0500	FP-PRE FAB	0	0	0	0	1.00	UT	3,500.00	3,500.00	100	2002	2002	3	84	2,940	
4	0860	POOL/SPA	0	0	0	0	1.00	UT	50,000.00	50,000.00	100	2002	2002	04	85	42,500	
6	0911	SCRN RM A	0	0	0	0	864.00	SF	18.00	18.00	100	2015	2015	3	60	9,331	

LAND DESCRIPTION

TOTAL OB/XF 54,771

LN	USE CODE	CLS	LAND USE DESCRIPTION	CAP	RD	LOC ZONE	FRONT	DEPTH	TOT LND UTS	UNIT TYPE	DT	DPTH FACT	% COND	TOT ADJ	UNIT PRICE	ADJ UNIT PRICE	LAND VALUE	OTHER ADJUSTMENTS AND NOTES	YEAR	DENSITY	DECL	FRZ	YR	CONSRV
1	000100	C	RES	0	0003	PUD	0.00	0.00	1.00	LT		1.00	1.00	1.00	325,000.00	325,000.00	325,000							

REVIEW DATE 01/01/2023 BY CD Total Acres: 0.00 Total Land Value: 325,000 Market: 0 Agricultural: 0 Common: 325,000 PRINTED 07/09/2026 BY SYS