LOT 1
AZALEA POINTE PB 6/164-165

BUENO EARL
9511 HILDRETH LN
FERNANDINA BEACH, FL 32034

2026

00-00-30-0131-0001-0000

NASSAU COUNTY PROPERTY

BUILDING CHARACTERISTICS

ELEMENT	CD	CONSTRUCTION
Exterior Wall	16	WD FR STUC 100
Roof Structur	03	GABLE/HIP 100
Roof Cover	03	COMP SHNGL 100
Interior Wall	05	DRYWALL 100
Interior Floo	12	HARDWOOD 50
Interior Floo	14	CARPET 50
Air Condition	03	CENTRAL 100
Heating Type	04	AIR DUCTED 100
Bedrooms		4 100
Bathrooms		4 100
Frame	02	WOOD FRAME 100
Stories	1.5	1.5 100
Units		0 100
Occupancy	00	NONE 100
Quality	04	Quality Level 04

DOR CODE	0100	SINGLE FAMILY	
MAP NUM		MKT AREA	03
NEIGHBORHOOD/LOC	3030.00		

AREA TYPE	TOTAL GROSS AREA	PCT OF BASE	YEAR	TOT ADJ AREA	SUBAREA MARKET VALUE
BAS	2,625	100	2002	2,625	340,245
FGR	748	55	2002	411	53,273
FOP	213	30	2002	64	8,295
FOP	250	30	2002	75	9,722
FUS	623	100	2002	623	80,752
STP	12	10	2002	1	129
TOTALS	4,471			3,799	492,416

MARKET ADJUSTMENTS

TYPE	MDL	EFF. AREA	TOT ADJ PTS	EFF. BASE RATE	REPL. COST NEW	AYB	EYB	ECON	FNCT		NORM	% COND
0900	01	3,799	105.3675	146.46	556,402	2002	2002	0	0	0	11.50	88.50

1 SNGL FAM 0% - 2026 Heated Area: 3248 HX Base Yr

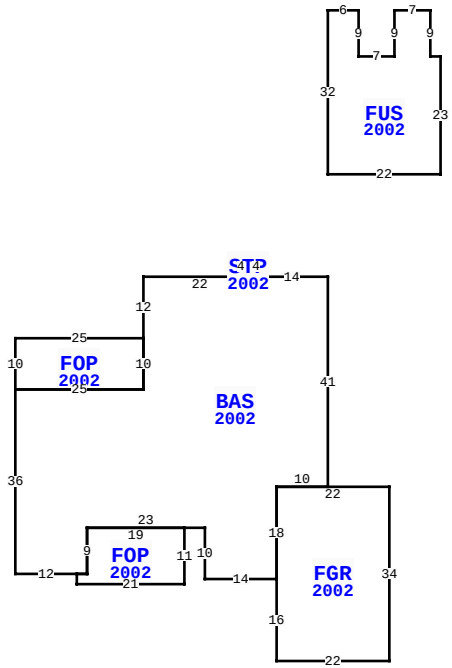

9511 HILDRETH LN, FERNANDINA BEACH

BLD DATE		LGL DATE	
XF DATE		LAND DATE	04/01/2026 MLU
INC DATE		AG DATE	

NASSAU COUNTY PROPERTY — VALUATION SUMMARY

VALUATION BY	STANDARD
Tax Group: 8	Tax Dist:
BUILDING MARKET VALUE	492,416
TOTAL MARKET OB/XF VALUE	47,024
TOTAL LAND VALUE - MARKET	325,000
TOTAL MARKET VALUE	864,440
SOH/AGL Deduction	0
ASSESSED VALUE	864,440
TOTAL EXEMPTION VALUE	0
BASE TAXABLE VALUE	864,440
TOTAL JUST VALUE	864,440
NCON VALUE	0
INCOME VALUE	
PREVIOUS YEAR MKT VALUE	837,384

PERMIT NUM	DESCRIPTION	AMT	ISSUED
B0209649	XFOB	4,800	05/01/2002
B0108637	NEW CONSTR	271,920	08/01/2001

SALES DATA

OFF RECORD Number	DATE	TYPE INST	Q / U	V / I	RSN CD	SALE PRICE
2862/214	4/17/2026	WD	Q	I	01	909,000
GRANTOR: ROBINSON TRUST						
GRANTEE: BUENO EARL						
2745/620	10/18/2024	SW	U	I	11	100
GRANTOR: ROBINSON JAMES C						
GRANTEE: ROBINSON TRUST						

BUILDING NOTES

BUILDING DIMENSIONS

BAS=[YR=2002] W14 STP=[YR=2002] N4 W3 S4 E3$ W22 S12 FOP=[YR=2002] W25 S10 E25 N10$ S10 W25 S36 E12 FOP=[YR=2002] S2 E21 N11 W19 S9 W2$ E2 N9 E23 S10 E14 FGR=[YR=2002] S16 E22 N34 W22 S18$ N18 E10 N41$ PTR=N20 FUS=[YR=2002] N32 E6 S9 E7 N9 E7 S9 E2 S23 W22$ S20$.

EXTRA FEATURES

LN	OB/XF CODE	DESCRIPTION	BLD	CAP	L	W	UNITS	UT	Adj R	ADJ UNIT PRICE	ORIG COND	YEAR ON	YEAR ACTUAL	Q	% COND	OB/XF MKT VALUE	NOTES
1	0500	FP-PRE FAB	0	0	0	0	1.00	UT	3,500.00	3,500.00	100	2002	2002	3	84	2,940	
4	0860	POOL/SPA	0	0	0	0	1.00	UT	50,000.00	50,000.00	100	2002	2002	04	85	42,500	
7	0910	SCRN RM L	0	0	0	0	528.00	SF	15.00	15.00	100	2002	2002	3	20	1,584	

LAND DESCRIPTION

TOTAL OB/XF 47,024

LN	USE CODE	CLS	LAND USE DESCRIPTION	CAP	RD	LOC ZONE	FRONT	DEPTH	TOT LND UTS	UNIT TYPE	DT	DPTH FACT	% COND	TOT ADJ	UNIT PRICE	ADJ UNIT PRICE	LAND VALUE	OTHER ADJUSTMENTS AND NOTES	YEAR	DENSITY	DECL	FRZ	YR	CONSRV
1	000100	C	RES	0	0003	PUD	0.00	0.00	1.00	LT		1.00	1.00	1.00	325,000.00	325,000.00	325,000							

REVIEW DATE 01/01/2023 BY CD Total Acres: 0.00 Total Land Value: 325,000 Market: 0 Agricultural: 0 Common: 325,000 PRINTED 07/09/2026 BY SYS