BLOCK 1 LOTS 20 & 21
IN OR 2037/329 & OR 2051/106
AMERICAN BEACH 3 UNIT 1

BROWN BRUCE H & CRESSIE D
5584 GREGG STREET
FERNANDINA BEACH, FL 32034

2026

00-00-30-010C-0001-0200

BUILDING CHARACTERISTICS

ELEMENT	CD	CONSTRUCTION
Exterior Wall	17	CB STUCCO 100
Roof Structur	03	GABLE/HIP 100
Roof Cover	03	COMP SHNGL 100
Interior Wall	05	DRYWALL 100
Interior Floo	03	CONC FINSH 50
Interior Floo	12	HARDWOOD 50
Air Condition	03	CENTRAL 100
Heating Type	04	AIR DUCTED 100
Bedrooms		4 100
Bathrooms		5.5 100
Frame	04	REIN CONC 100
Stories	3.	3. 100
Units		0 100
Quality	03	Quality Level 03
DOR CODE	0100	SINGLE FAMILY
MAP NUM		MKT AREA 03
NEIGHBORHOOD/LOC	3038.00	

AREA TYPE	TOTAL GROSS AREA	PCT OF BASE	YEAR	TOT ADJ AREA	SUBAREA MARKET VALUE
BAL	479	15	2020	72	14,833
BAS	1,341	100	2020	1,341	276,257
FGR	1,656	55	2020	911	187,673
FOP	100	30	2020	30	6,181
FOP	248	30	2020	74	15,244
FOP	256	30	2020	77	15,862
FOP	884	30	2020	265	54,592
FST	36	55	2020	20	4,120
FST	36	55	2020	20	4,120
FUS	1,586	100	2020	1,586	326,728
TOTALS	10,564			7,633	1,572,458

MARKET ADJUSTMENTS

TYPE	MDL	EFF. AREA	TOT ADJ PTS	EFF. BASE RATE	REPL. COST NEW	AYB	EYB	ECON	FNCT		NORM	% COND
0500	11	7,633	127.2858	211.29	1,612,777	2020	2020	0	0	0	2.50	97.50

2 SFR CUST 100% - 2024 Heated Area: 6009 HX Base Yr

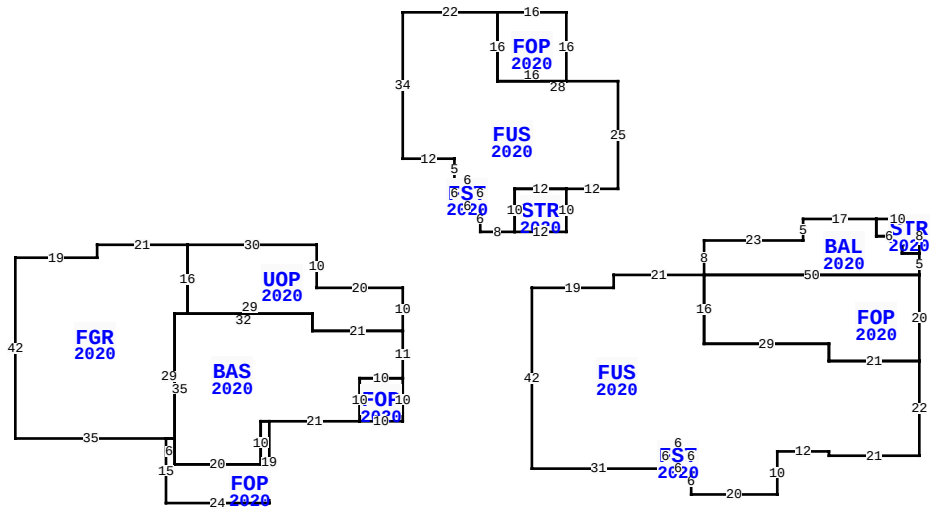

** This building has 14 Sub-Areas

5584 GREGG ST, FERNANDINA BEACH

BLD DATE		LGL DATE	
XF DATE		LAND DATE	05/05/2026 MLU
INC DATE		AG DATE	

NASSAU COUNTY PROPERTY

PAGE 1 of 1 8

VALUATION SUMMARY

VALUATION BY		STANDARD
Tax Group: 8	Tax Dist:	
BUILDING MARKET VALUE		1,572,458
TOTAL MARKET OB/XF VALUE		82,160
TOTAL LAND VALUE - MARKET		2,500,000
TOTAL MARKET VALUE		4,154,618
SOH/AGL Deduction		669,159
ASSESSED VALUE		3,485,459
TOTAL EXEMPTION VALUE	13	3,485,459
BASE TAXABLE VALUE		0
TOTAL JUST VALUE		4,154,618
NCON VALUE		70,000
INCOME VALUE		
PREVIOUS YEAR MKT VALUE		3,325,666

PERMIT NUM	DESCRIPTION	AMT	ISSUED
SP250000886	POOL	114,249	01/27/2025
20000366	CO ISSUED	0	12/26/2020
B1810366	NEW CONSTR	780,678	10/12/2018

SALES DATA

OFF RECORD Number	DATE	TYPE INST	Q U	V I	RSN CD	SALE PRICE
2051/0106	6/06/2016	WD	Q	V	01	325,000
GRANTOR: AGARWAL MUKESH & NISH						
GRANTEE: BROWN CRESSIE D & B						
2037/0329	3/31/2016	WD	Q	V	01	375,000
GRANTOR: AGARWAL MUKESH C & NI						
GRANTEE: BROWN BRUCE H & CRE						

BUILDING NOTES

BUILDING DIMENSIONS

UOP=[YR=2020] W20 N10W30 FGR=[YR=2020] W21 S3 W19 S42 E35
FOP=[YR=2020] S15 E24 N19 BAS=[YR=2020] E21 FOP=[YR=2020]
E10 N10 W10 S10 $ N10 E10 N11 W21 N4 W32 S35 E20 N10 E2$ W2
S10 W20 N6 W2 $ E2 N29 E3 N16 $ S16 E29 S4 E21 N10 $ PTR= E30
FUS=[YR=2020] E19 N3 E21 BAL=[YR=2020] N8 E23 N5 E17
STR=[YR=2020] E10 S8 W4 N4 W6 N4 $ S4 E6 S4 E4
S5FOP=[YR=2020] S20 W21 N4 W29 N16 E50 $ W50 $ S16 E29 S4
E21 S22 W21 N1 W12 S10 W20 N6 FST=[YR=2020] N6 W6 S6 E6 $ N6
W6 S6 W31 N42 $ W30 $ PTR= N30 FUS=[YR=2020] N34 E22
FOP=[YR=2020] E16 S16 W16 N16 $ S16 E28 S25 W12
STR=[YR=2020] S10 W12 N10 E12 $ W12 S10 W8 N6 FST=[YR=2020]
W6 N6 E6 S6 $ N6 W6 N5 W12 $ S30 $.

EXTRA FEATURES

LN	OB/XF CODE	DESCRIPTION	BLD	CAP	L	W	UNITS	UT	Adj R	ADJ UNIT PRICE	ORIG COND	YEAR ON	YEAR ACTUAL	Q	% COND	OB/XF MKT VALUE	NOTES
2	0409	ELEVATOR R	0	100	0	0	1.00	UT	10,200.00	10,200.00	100	2020	2020	3	100	10,200	
3	0504	FP-ELECTRI	0	100	0	0	1.00	UT	2,000.00	2,000.00	100	2020	2020	3	98	1,960	
4	0860	POOL/SPA	0	100	0	0	1.00	UT	70,000.00	70,000.00	100	2026	2025	06	100	70,000	

LAND DESCRIPTION

TOTAL OB/XF 82,160

LN	USE CODE	CLS	LAND USE DESCRIPTION	CAP	RD	LOC ZONE	FRONT	DEPTH	TOT LND UTS	UNIT TYPE	DT	DPTH FACT	% COND	TOT ADJ	UNIT PRICE	ADJ UNIT PRICE	LAND VALUE	OTHER ADJUSTMENTS AND NOTES	YEAR	DENSITY	DECL	FRZ	YR	CONSRV
1	000120	C	RES OCEAN	100		RG-1	100.00	158.00	100.00	FF		1.00	1.00	1.00	25,000.00	25,000.00	2,500,000							

REVIEW DATE 01/01/2023 BY CD Total Acres: 0.00 Total Land Value: 2,500,000 Market: 0 Agricultural: 0 Common: 2,500,000 PRINTED 07/09/2026 BY SYS